PHILIPS

CoreLine
Recessed

RC134Z/RC135Z

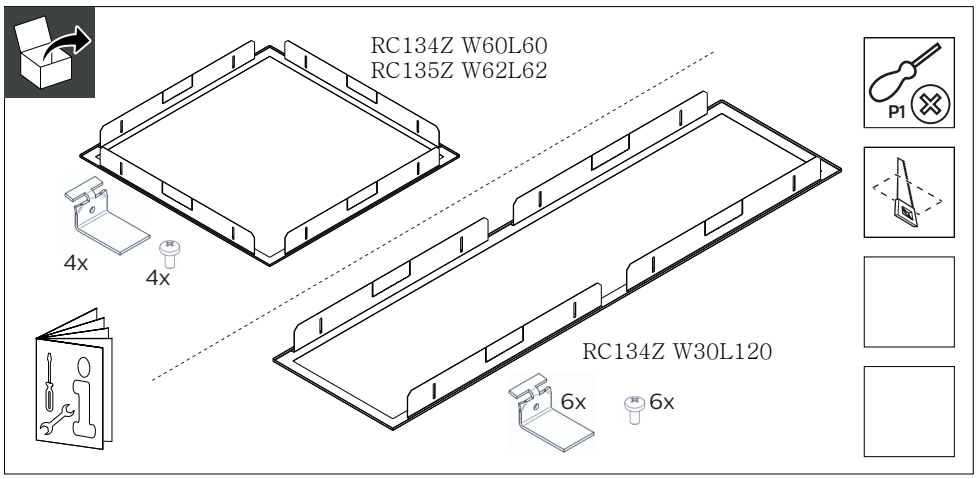

indoor

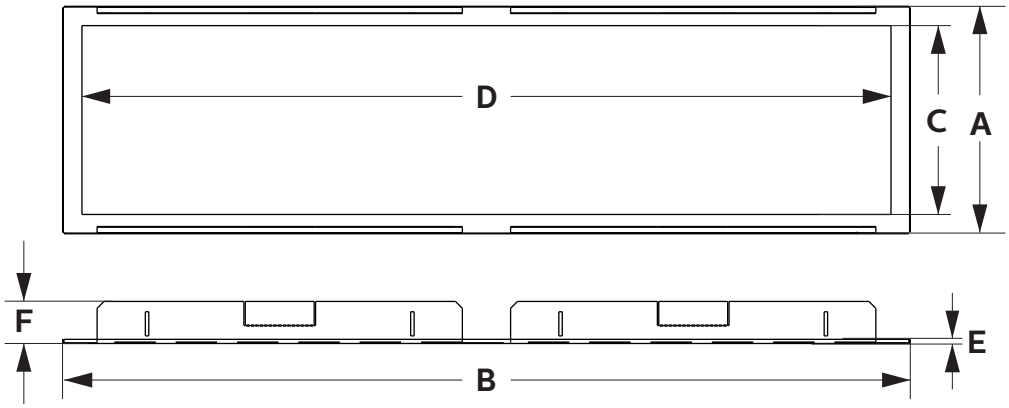

	A(mm)	B(mm)	C(mm)	D(mm)	E(mm)	F(mm)
RC134Z W30L120	330	1230	274	1174	6	45

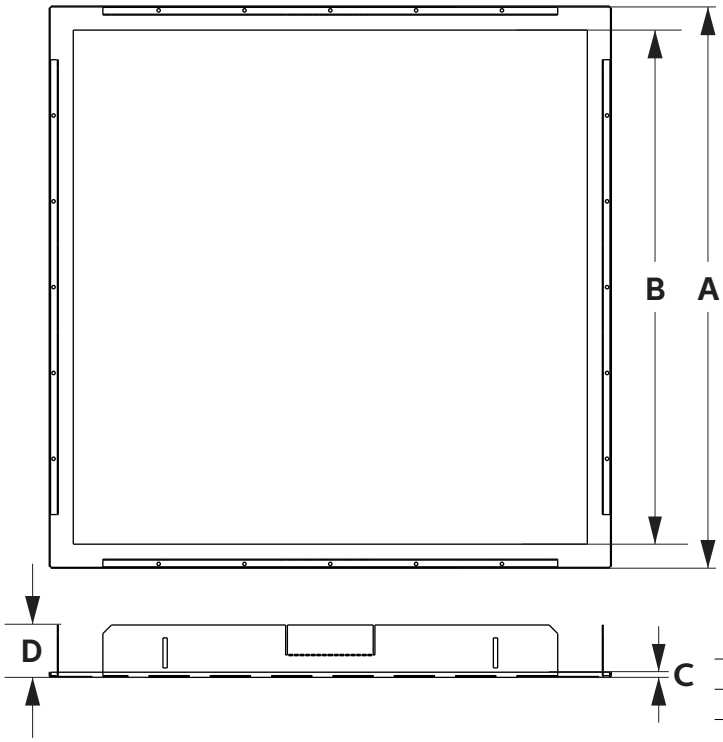

	A(mm)	B(mm)	C(mm)	D(mm)
RC134Z W60L60	630	574	6	45
RC135Z W62L62	655	599	6	45

4427 103 29311
© 2018, Philips Lighting Holding B.V. All rights reserved

Printed in The Netherlands
Data subject to change without notice
Keep for future reference: www.philips.com/lighting

PCV (Plaster ceiling version)

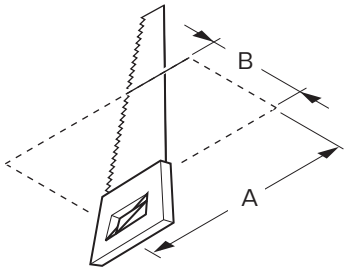

Module	A(mm)	B(mm)	(mm)	(mm)
RC134Z W60L60	615	615	12-24	200
RC134Z W30L120	315	1215	12-24	200
RC135Z W62L62	640	640	12-24	200

1

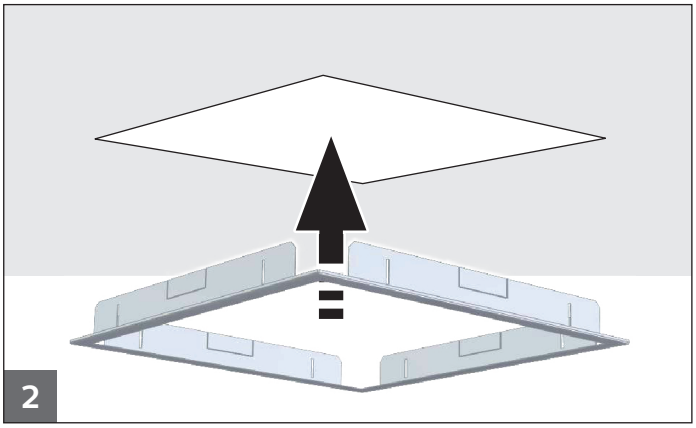

2

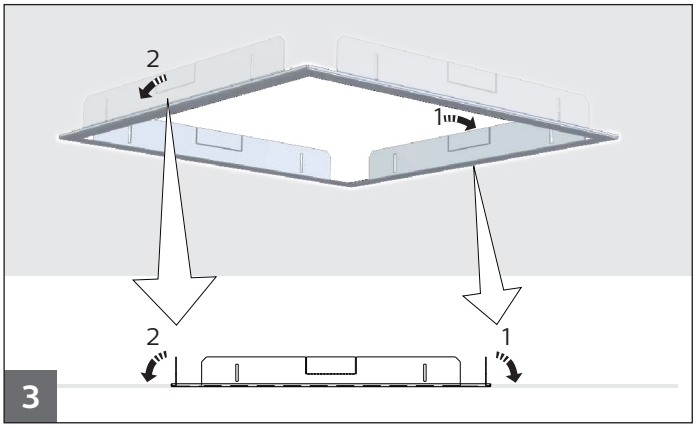

3

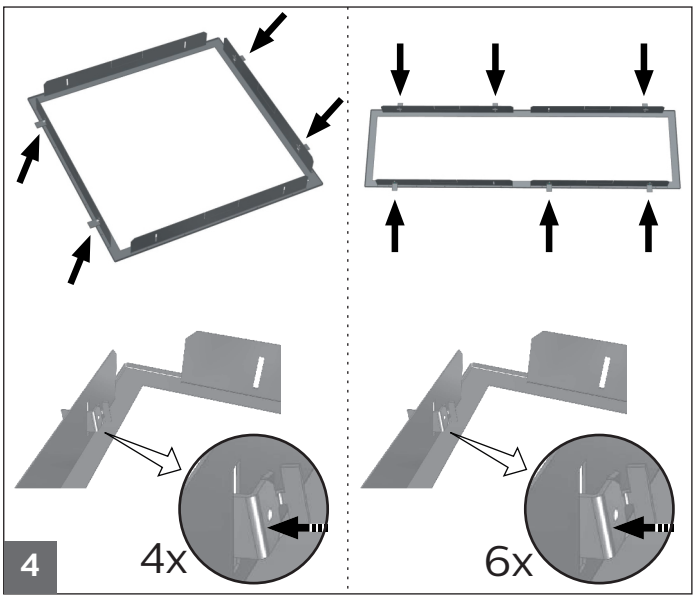

4

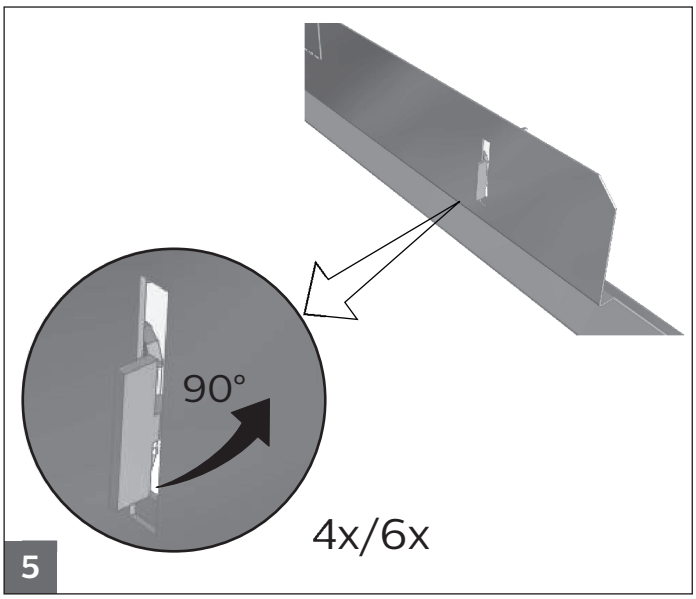

5

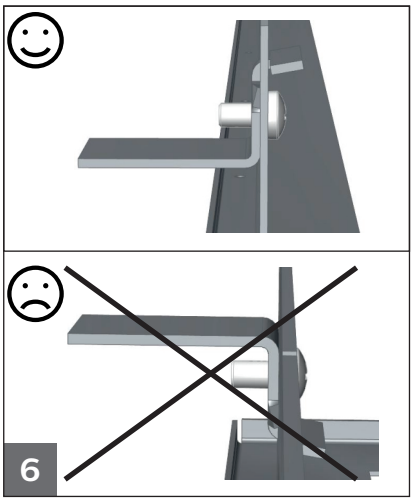

6

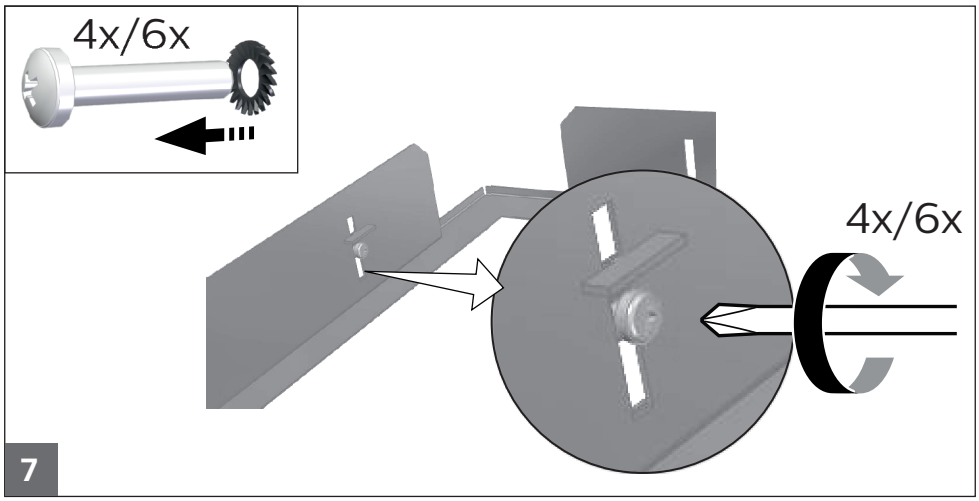

7