LEDALITE by signify

# Linear

## ModiFly

## Wall

Project:

Location:

Cat.No:

Type:

Qty:

Notes:

**ModiFly wall** is a key component of any layered lighting design – adding to the visual comfort within a space in combination with complementing ModiFly suspended luminaires. With ModiFly's versatility, design spaces with wall mount luminaires, or use Ledalite's bi, tri, or quad links to connect wall mount to suspended luminaires for design continuity in a space.

## Ordering guide

Example: MF-0-W-L-840-25-W-N-08-D-E-1-N-NN-W

| Family | Version [3] | Type | Source | CRI/CCT [1,2] | Lumens[1] | Optics | Distribution[1] | Run Length |
|---|---|---|---|---|---|---|---|---|
| MF | | W | L | | | W | N | |
| **MF** ModiFly | **0** Standard wall mount<br>**TRAN** Transition from Wall to Suspended with bi, tri, or quad link[3] | **W** Wall | **L** LED | **850** 80CRI/5000K<br>**840** 80CRI/4000K<br>**835** 80CRI/3500K<br>**830** 80CRI/3000K<br>**827** 80CRI/2700K[6]<br>**935** 90CRI/3500K<br>**8T2** 2-channel Tunable White 80 CRI/2700-6500K[6] (For PoE Lighting Controller only) | **35** 3500lm/4ft<br>**30** 3000 lm/4ft<br>**25** 2500 lm/4ft<br>**20** 2000 lm/4ft<br>**15** 1500 lm/4ft<br>**10** 1000 lm/4ft | **W** Vertical Light Guide (Asymmetric Throw) | **N** 85% Down / 15% Up | **02** 2ft<br>**04** 4ft<br>**05** 5ft<br>**06** 6ft<br>**08** 8ft<br>**XX** Continuous run in 1ft increments |

| Voltage [2] | Driver [2] | Circuit | Wiring Option[2] | Sensors [2] | Finish |
|---|---|---|---|---|---|
| | | 1 | | | |
| **D** UNV 120-277V<br>**3** 347V | **E** Advance 0-10V (1% Dim) | **1** Single Circuit | **N** Standard, No Option<br>**E** Aux. Wiring[5]<br>**B** Battery Pack, Integral | **NN** No Integral Sensor | **W** Standard White<br>**H** Hero Gold<br>**S** Silver Nova<br>**V** Venom Black<br>**T** Titanium Silver<br>**B** Black<br>**C** Custom |
| **D** UNV 120-277V | **S** Advance Sensor Ready (5% Dim)[4] | | | | |
| **D** UNV 120-277V | **H** Lutron EcoSystem LDE1 (1% Dim) | | | | |
| **L** Low Voltage (48-54V DC) | **P** PoE Lighting Controller | | | | |

**Footnotes:**

1. Nominal values within a range. Consult photometry data for for actual luminous flux, CRI, and CCT.
2. Not all wiring types are available with all configurations. Consult Ledalite for a complete list of available options. Tunable White & PoE options requires separate controls hardware by Signify.
3. See Page 3 of spec sheet for how to specify transitions from wall to suspended mounting.
4. The Advance Sensor Ready Driver is typically only required in Transitional Wall to Suspended applications.
5. Aux. Wiring not available on Tunable White & PoE configurations.
6. Tunable White option is only available with PoE Lighting Controllers, consult factory for alternative control systems.

## Specification made easy

For wall to suspended transitions, we've taken the guess work out of ensuring the wall and suspended luminaires look the same. Simply specify the SAME lumen output (ie. 2000lm for wall, and 2000lm for suspended), and you're all set. For actual luminous flux values for wall mount, please refer to photometry IES files.

# ModiFly wall

## Options and details

### Performance summary – wall*

| LED Output (lm/ft) | 250lm | | 375lm | | 500lm | | 625lm | | 750lm | | 875lm | |
|---|---|---|---|---|---|---|---|---|---|---|---|---|
| CRI* | 80 | 90 | 80 | 90 | 80 | 90 | 80 | 90 | 80 | 90 | 80 | 90 |
| Energy (W/ft) | 2.3 | 2.6 | 3.0 | 3.7 | 3.9 | 4.7 | 4.8 | 5.9 | 5.9 | 7.1 | 6.9 | 8.3 |
| Efficacy (lm/W) | 106 | 92 | 120 | 101 | 125 | 106 | 128 | 104 | 125 | 104 | 124 | 103 |

*80CRI values based on 4000K CCT; 90CRI values based on 3500K CCT

### Lengths and dimensions

8ft Luminaire

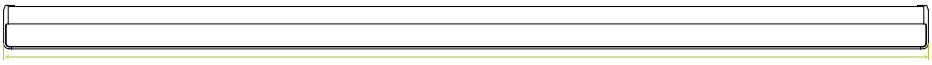


6ft Luminaire

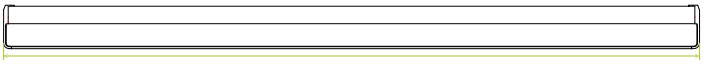


5ft Luminaire

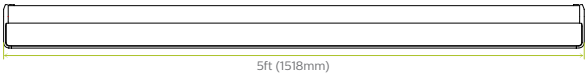


4ft Luminaire

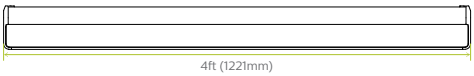


2ft Luminaire

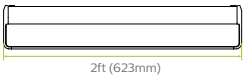


### Cross section

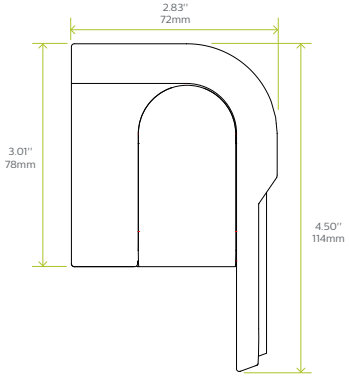


### Finish options

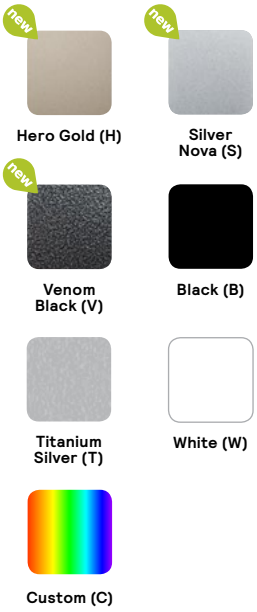


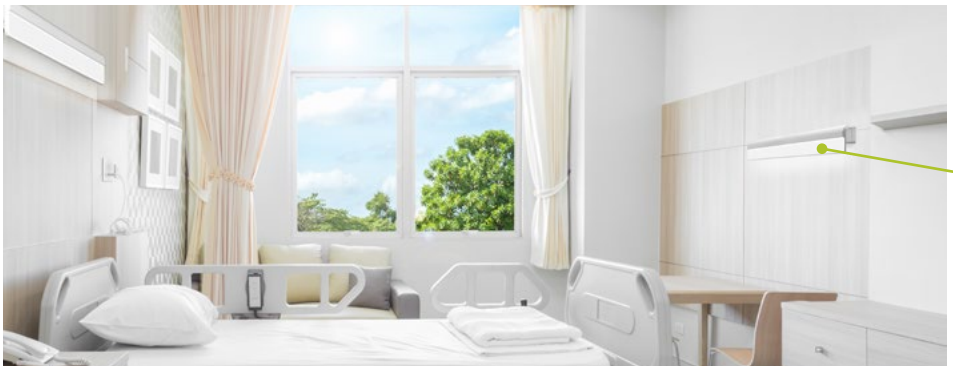

Additional LED board for added wall side illumination to optimize performance and light distribution.

# ModiFly wall

## ModiFly articulating links

Harness the ultimate flexibility of on-site articulation of luminaires. Create one-of-a-kind designs with unique shapes and precision angles. ModiFly's factory pre-wired Bi, Tri, and Quad-link systems allow for articulating luminaires on-site, allowing for final touches of angulation to be just perfect.

**Static Link***

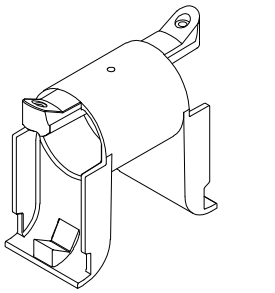


**Bi-Link**

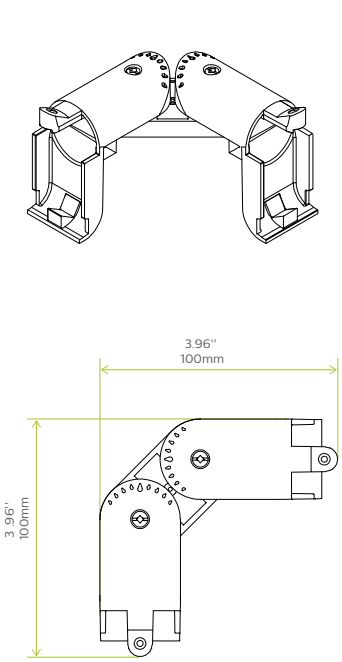


**Tri-Link**

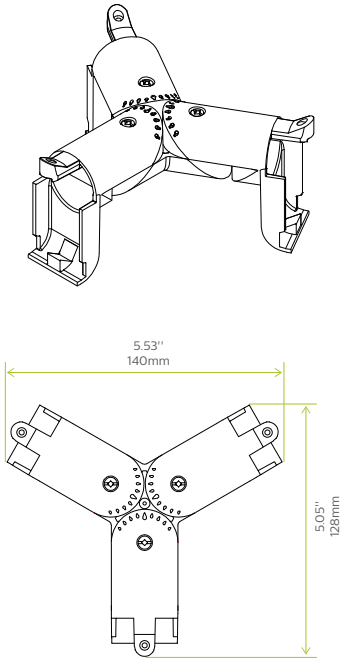


**Quad-Link**

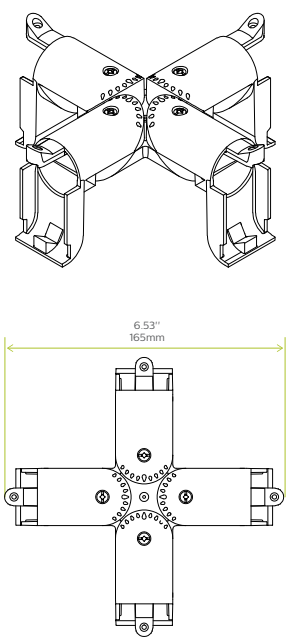


*Static links apply to continuous wall mount runs only; all other links apply to suspended patterns/shapes.

## Seamlessly transition from wall to suspended

For wall to suspended transitions, installers can feed power from the wall mount luminaire, so no power drops are visible!

### Tri-link

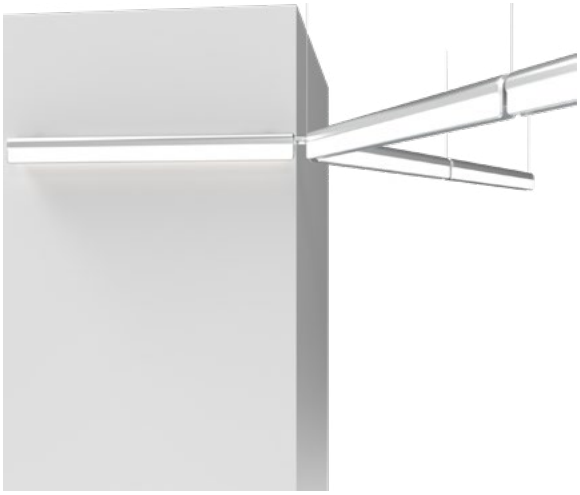

### Quad-link

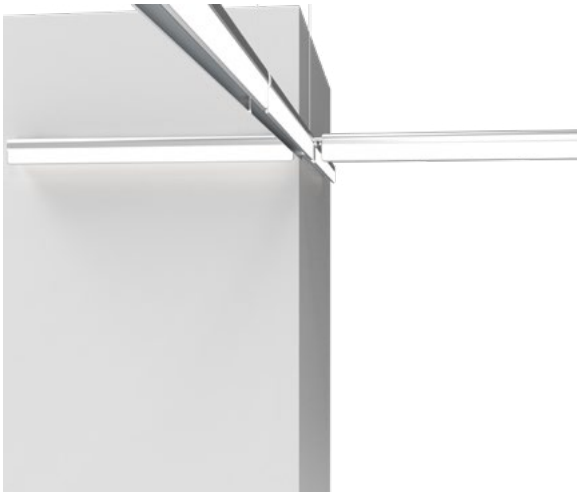

# ModiFly wall

## ModiFly – 4ft wall Photometrics

| Lumen Package | Nominal CRI & CCT | Flux (lm) | Watts (W) | Efficacy (lm/W) | CRI | R9 | WELL** | Photometry Report | IES File | Revit/BIM |
|---|---|---|---|---|---|---|---|---|---|---|
| 1000 lm/4ft | 2700K 80 CRI | 840 | 9 | 93 | 82 | 5 | Yes | PDF | IES | RFA |
| | 3000K 80 CRI | 889 | 9 | 99 | 83 | 10 | | PDF | IES | |
| | 3500K 80 CRI | 912 | 9 | 101 | 84 | 11 | | PDF | IES | |
| | 4000K 80 CRI | 955 | 9 | 106 | 81 | 4 | | PDF | IES | |
| | 5000K 80 CRI | 955 | 9 | 106 | 83 | 15 | | PDF | IES | |
| | 3500K 90 CRI | 968 | 11 | 92 | 93 | 67 | | PDF | IES | |
| 1500 lm/4ft | 2700K 80 CRI | 1279 | 12 | 106 | 82 | 5 | Yes | PDF | IES | RFA |
| | 3000K 80 CRI | 1354 | 12 | 112 | 83 | 10 | | PDF | IES | |
| | 3500K 80 CRI | 1389 | 12 | 115 | 84 | 11 | | PDF | IES | |
| | 4000K 80 CRI | 1455 | 12 | 120 | 81 | 4 | | PDF | IES | |
| | 5000K 80 CRI | 1456 | 12 | 120 | 83 | 15 | | PDF | IES | |
| | 3500K 90 CRI | 1475 | 15 | 101 | 93 | 67 | | PDF | IES | |
| 2000 lm/4ft | 2700K 80 CRI | 1737 | 16 | 111 | 82 | 5 | Yes | PDF | IES | RFA |
| | 3000K 80 CRI | 1839 | 16 | 117 | 83 | 10 | | PDF | IES | |
| | 3500K 80 CRI | 1874 | 16 | 119 | 84 | 11 | | PDF | IES | |
| | 4000K 80 CRI | 1961 | 16 | 125 | 81 | 4 | | PDF | IES | |
| | 5000K 80 CRI | 1962 | 16 | 125 | 83 | 15 | | PDF | IES | |
| | 3500K 90 CRI | 1963 | 19 | 106 | 93 | 67 | | PDF | IES | |
| 2500 lm/4ft | 2700K 80 CRI | 2184 | 19 | 113 | 82 | 5 | Yes | PDF | IES | RFA |
| | 3000K 80 CRI | 2312 | 19 | 120 | 83 | 10 | | PDF | IES | |
| | 3500K 80 CRI | 2350 | 19 | 122 | 84 | 11 | | PDF | IES | |
| | 4000K 80 CRI | 2460 | 19 | 128 | 81 | 4 | | PDF | IES | |
| | 5000K 80 CRI | 2461 | 19 | 128 | 83 | 15 | | PDF | IES | |
| | 3500K 90 CRI | 2459 | 24 | 104 | 93 | 67 | | PDF | IES | |
| 3000 lm/4ft | 2700K 80 CRI | 2593 | 24 | 110 | 82 | 5 | N/A | PDF | IES | RFA |
| | 3000K 80 CRI | 2745 | 24 | 117 | 83 | 10 | | PDF | IES | |
| | 3500K 80 CRI | 2796 | 24 | 119 | 84 | 11 | | PDF | IES | |
| | 4000K 80 CRI | 2927 | 24 | 125 | 81 | 4 | | PDF | IES | |
| | 5000K 80 CRI | 2928 | 24 | 125 | 83 | 15 | | PDF | IES | |
| | 3500K 90 CRI | 2934 | 28 | 104 | 93 | 67 | | PDF | IES | |
| 3500 lm/4ft | 2700K 80 CRI | 3015 | 27 | 110 | 82 | 5 | N/A | PDF | IES | RFA |
| | 3000K 80 CRI | 3191 | 27 | 117 | 83 | 10 | | PDF | IES | |
| | 3500K 80 CRI | 3250 | 27 | 119 | 84 | 11 | | PDF | IES | |
| | 4000K 80 CRI | 3402 | 27 | 124 | 81 | 4 | | PDF | IES | |
| | 5000K 80 CRI | 3403 | 27 | 124 | 83 | 15 | | PDF | IES | |
| | 3500K 90 CRI | 3394 | 33 | 103 | 93 | 67 | | PDF | IES | |

Values per 4ft. Fixture photometry has been conducted in accordance with IESNA LM-79-08. IES files for this and other options can be downloaded online at ledalite.com.
*Luminaires painted in finishes other than standard white result in an up to 21% drop in light flux and efficacy. DLC is only available for configurations with a standard white finish and no battery pack.
**The WELL Building Standard® is the first standard to integrate human health and wellness into the design,construction, maintenance and operations of buildings.
Select ModiFly configurations contribute toward satisfying features L04 and L07 under the WELL Building Standard®.

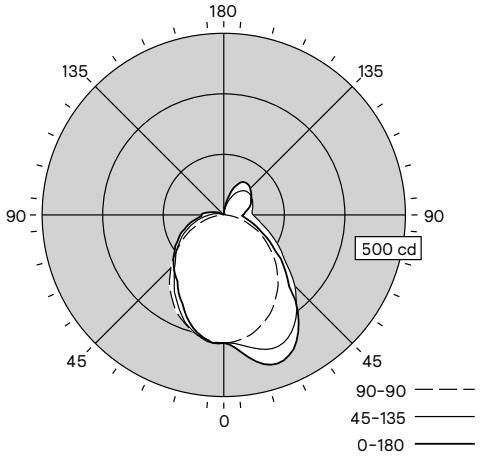


17% Up / 83% Down

**CANDELA DISTRIBUTION**

| Vertical Angle | Horizontal Angle 0° | 45° | 90° | 135° | 180° | Zonal Lumens |
|---|---|---|---|---|---|---|
| 0° | 648 | 648 | 648 | 648 | 648 | |
| 5° | 675 | 653 | 643 | 650 | 649 | 62 |
| 15° | 781 | 702 | 610 | 607 | 593 | 184 |
| 25° | 782 | 714 | 552 | 530 | 495 | 279 |
| 35° | 660 | 636 | 472 | 437 | 409 | 323 |
| 45° | 456 | 509 | 379 | 348 | 359 | 316 |
| 55° | 319 | 368 | 278 | 287 | 302 | 278 |
| 65° | 215 | 280 | 188 | 223 | 246 | 224 |
| 75° | 146 | 208 | 97 | 156 | 184 | 166 |
| 85° | 100 | 164 | 26 | 99 | 124 | 115 |
| 90 | 97 | 149 | 7 | 73 | 112 | |
| 95° | 106 | 144 | 8 | 54 | 101 | 86 |
| 105° | 131 | 152 | 9 | 23 | 55 | 73 |
| 115° | 152 | 161 | 9 | 5 | 24 | 65 |
| 125° | 171 | 169 | 8 | 4 | 5 | 58 |
| 135° | 188 | 166 | 7 | 5 | 6 | 51 |
| 145° | 198 | 147 | 5 | 4 | 6 | 39 |
| 155° | 173 | 109 | 4 | 4 | 6 | 23 |
| 165° | 96 | 57 | 4 | 4 | 5 | 9 |
| 175° | 23 | 11 | 4 | 4 | 4 | 1 |
| 180° | 4 | 4 | 4 | 4 | 4 | |

*Photometric data shown is for 2500 lm/4ft, 3500K, 80 CRI configuration

**COEFFICIENTS OF UTILIZATION (%)**

| Pc--- | 80 | | | | 70 | | | 50 | | | 0 |
|---|---|---|---|---|---|---|---|---|---|---|---|
| Pw--- | 70 | 50 | 30 | 10 | 70 | 50 | 30 | 50 | 30 | 10 | 0 |
| RCR | | | | | | | | | | | |
| 0 | 115 | 115 | 115 | 115 | 110 | 110 | 110 | 102 | 102 | 102 | 83 |
| 1 | 104 | 98 | 94 | 89 | 99 | 94 | 90 | 87 | 84 | 80 | 66 |
| 2 | 94 | 85 | 78 | 72 | 90 | 82 | 75 | 76 | 70 | 66 | 55 |
| 3 | 86 | 75 | 67 | 60 | 82 | 72 | 64 | 66 | 60 | 55 | 46 |
| 4 | 78 | 66 | 57 | 51 | 75 | 64 | 56 | 59 | 52 | 47 | 39 |
| 5 | 72 | 59 | 50 | 44 | 69 | 57 | 49 | 53 | 46 | 41 | 34 |
| 6 | 66 | 53 | 44 | 38 | 63 | 51 | 43 | 48 | 41 | 36 | 30 |
| 7 | 62 | 48 | 40 | 34 | 59 | 47 | 39 | 44 | 37 | 31 | 26 |
| 8 | 57 | 44 | 36 | 30 | 55 | 43 | 35 | 40 | 33 | 28 | 24 |
| 9 | 54 | 40 | 32 | 27 | 51 | 39 | 32 | 37 | 30 | 25 | 21 |
| 10 | 50 | 37 | 29 | 24 | 48 | 36 | 29 | 34 | 27 | 23 | 19 |

**AVG LUMINANCE (cd/m2)**

| | 0° | 90° | 180° |
|---|---|---|---|
| 0° | 11705 | 11705 | 11705 |
| 5° | 10967 | 11604 | 10548 |
| 15° | 10765 | 11255 | 8178 |
| 25° | 9616 | 10760 | 6082 |
| 35° | 7534 | 10048 | 4660 |
| 45° | 4995 | 9215 | 3928 |
| 55° | 3462 | 8173 | 3273 |
| 65° | 2378 | 7266 | 2721 |
| 75° | 1708 | 5700 | 2154 |
| 85° | 1275 | 3355 | 1577 |

**ZONAL LUMEN SUMMARY**

| Zone | Lumens | %Fixture |
|---|---|---|
| 0-30° | 525 | 22.3% |
| 0-40° | 848 | 36.1% |
| 0-60° | 1442 | 61.4% |
| 0-90° | 1946 | 82.8% |
| 90-130° | 282 | 12.0% |
| 90-150° | 372 | 15.8% |
| 90-180° | 404 | 17.2% |
| 0-180° | 2350 | 100.0% |

# ModiFly wall

## ModiFly – 2ft wall Photometrics

| Lumen Package (per 4ft) | Nominal CRI & CCT | Flux (lm) | Watts (W) | Efficacy (lm/W) | CRI | R9 | WELL** | Photometry Report | IES File | Revit/BIM |
|---|---|---|---|---|---|---|---|---|---|---|
| 1000 lm/4ft | 2700K 80 CRI | 418 | 6 | 72 | 82 | 5 | Yes | PDF | IES | RFA |
| | 3000K 80 CRI | 442 | 6 | 76 | 83 | 10 | | PDF | IES | |
| | 3500K 80 CRI | 453 | 6 | 78 | 84 | 11 | | PDF | IES | |
| | 4000K 80 CRI | 474 | 6 | 82 | 81 | 4 | | PDF | IES | |
| | 5000K 80 CRI | 474 | 6 | 82 | 83 | 15 | | PDF | IES | |
| | 3500K 90 CRI | 477 | 7 | 72 | 93 | 67 | | PDF | IES | |
| 1500 lm/4ft | 2700K 80 CRI | 636 | 8 | 84 | 82 | 5 | Yes | PDF | IES | RFA |
| | 3000K 80 CRI | 673 | 8 | 89 | 83 | 10 | | PDF | IES | |
| | 3500K 80 CRI | 691 | 8 | 91 | 84 | 11 | | PDF | IES | |
| | 4000K 80 CRI | 722 | 8 | 95 | 81 | 4 | | PDF | IES | |
| | 5000K 80 CRI | 722 | 8 | 95 | 83 | 15 | | PDF | IES | |
| | 3500K 90 CRI | 727 | 9 | 85 | 93 | 67 | | PDF | IES | |
| 2000 lm/4ft | 2700K 80 CRI | 864 | 9 | 93 | 82 | 5 | Yes | PDF | IES | RFA |
| | 3000K 80 CRI | 915 | 9 | 98 | 83 | 10 | | PDF | IES | |
| | 3500K 80 CRI | 932 | 9 | 100 | 84 | 11 | | PDF | IES | |
| | 4000K 80 CRI | 976 | 9 | 105 | 81 | 4 | | PDF | IES | |
| | 5000K 80 CRI | 976 | 9 | 105 | 83 | 15 | | PDF | IES | |
| | 3500K 90 CRI | 973 | 11 | 92 | 93 | 67 | | PDF | IES | |
| 2500 lm/4ft | 2700K 80 CRI | 1086 | 11 | 100 | 82 | 5 | Yes | PDF | IES | RFA |
| | 3000K 80 CRI | 1150 | 11 | 106 | 83 | 10 | | PDF | IES | |
| | 3500K 80 CRI | 1169 | 11 | 107 | 84 | 11 | | PDF | IES | |
| | 4000K 80 CRI | 1224 | 11 | 112 | 81 | 4 | | PDF | IES | |
| | 5000K 80 CRI | 1224 | 11 | 112 | 83 | 15 | | PDF | IES | |
| | 3500K 90 CRI | 1207 | 13 | 95 | 93 | 67 | | PDF | IES | |
| 3000 lm/4ft | 2700K 80 CRI | 1290 | 13 | 103 | 82 | 5 | N/A | PDF | IES | RFA |
| | 3000K 80 CRI | 1365 | 13 | 109 | 83 | 10 | | PDF | IES | |
| | 3500K 80 CRI | 1391 | 13 | 111 | 84 | 11 | | PDF | IES | |
| | 4000K 80 CRI | 1456 | 13 | 117 | 81 | 4 | | PDF | IES | |
| | 5000K 80 CRI | 1457 | 13 | 117 | 83 | 15 | | PDF | IES | |
| | 3500K 90 CRI | 1446 | 15 | 97 | 93 | 67 | | PDF | IES | |
| 3500 lm/4ft | 2700K 80 CRI | 1499 | 15 | 103 | 82 | 5 | N/A | PDF | IES | RFA |
| | 3000K 80 CRI | 1587 | 15 | 109 | 83 | 10 | | PDF | IES | |
| | 3500K 80 CRI | 1617 | 15 | 112 | 84 | 11 | | PDF | IES | |
| | 4000K 80 CRI | 1692 | 15 | 117 | 81 | 4 | | PDF | IES | |
| | 5000K 80 CRI | 1693 | 15 | 117 | 83 | 15 | | PDF | IES | |
| | 3500K 90 CRI | 1671 | 17 | 98 | 93 | 67 | | PDF | IES | |

Values per 2ft. Fixture photometry has been conducted in accordance with IESNA LM-79-08. IES files for this and other options can be downloaded online at ledalite.com.
*Luminaires painted in finishes other than standard white result in an up to 21% drop in light flux and efficacy. DLC is only available for configurations with a standard white finish and no battery packs.
**The WELL Building Standard® is the first standard to integrate human health and wellness into the design,construction, maintenance and operations of buildings.
Select ModiFly configurations contribute toward satisfying features L04 and L07 under the WELL Building Standard®.

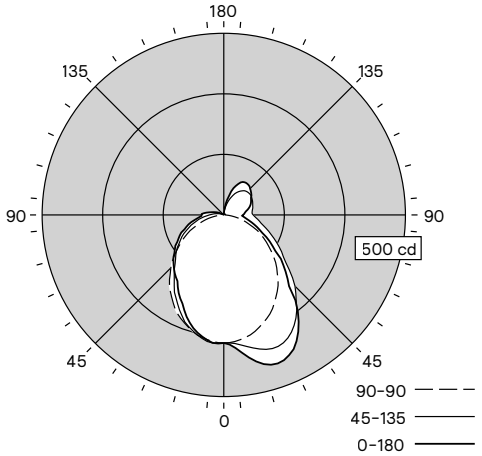


17% Up / 83% Down

**CANDELA DISTRIBUTION**

| Vertical Angle | Horizontal Angle 0° | 45° | 90° | 135° | 180° | Zonal Lumens |
|---|---|---|---|---|---|---|
| 0° | 175 | 175 | 175 | 175 | 175 | |
| 5° | 183 | 177 | 174 | 176 | 176 | 17 |
| 15° | 211 | 190 | 165 | 164 | 161 | 50 |
| 25° | 212 | 193 | 150 | 143 | 134 | 76 |
| 35° | 179 | 172 | 128 | 118 | 111 | 88 |
| 45° | 123 | 138 | 103 | 94 | 97 | 86 |
| 55° | 86 | 100 | 75 | 78 | 82 | 75 |
| 65° | 58 | 76 | 51 | 60 | 67 | 61 |
| 75° | 40 | 56 | 26 | 42 | 50 | 45 |
| 85° | 27 | 44 | 7 | 27 | 33 | 31 |
| 90 | 26 | 40 | 2 | 20 | 30 | |
| 95° | 29 | 39 | 2 | 15 | 27 | 23 |
| 105° | 35 | 41 | 2 | 6 | 15 | 20 |
| 115° | 41 | 44 | 2 | 1 | 6 | 18 |
| 125° | 46 | 46 | 2 | 1 | 1 | 16 |
| 135° | 51 | 45 | 2 | 1 | 2 | 14 |
| 145° | 54 | 40 | 1 | 1 | 2 | 11 |
| 155° | 47 | 29 | 1 | 1 | 2 | 6 |
| 165° | 26 | 15 | 1 | 1 | 1 | 2 |
| 175° | 6 | 3 | 1 | 1 | 1 | 0 |
| 180° | 1 | 1 | 1 | 1 | 1 | |

*Photometric data shown is for 2500 lm/4ft, 3500K, 80 CRI configuration

**COEFFICIENTS OF UTILIZATION (%)**

| Pc--- | 80 | | | | 70 | | | 50 | | | 0 |
|---|---|---|---|---|---|---|---|---|---|---|---|
| Pw--- | 70 | 50 | 30 | 10 | 70 | 50 | 30 | 50 | 30 | 10 | 0 |
| RCR | | | | | | | | | | | |
| 0 | 115 | 115 | 115 | 115 | 110 | 110 | 110 | 102 | 102 | 102 | 83 |
| 1 | 104 | 98 | 94 | 89 | 99 | 94 | 90 | 87 | 84 | 80 | 66 |
| 2 | 94 | 85 | 78 | 72 | 90 | 82 | 75 | 76 | 70 | 66 | 55 |
| 3 | 86 | 75 | 67 | 60 | 82 | 72 | 64 | 66 | 60 | 55 | 46 |
| 4 | 78 | 66 | 57 | 51 | 75 | 64 | 56 | 59 | 52 | 47 | 39 |
| 5 | 72 | 59 | 50 | 44 | 69 | 57 | 49 | 53 | 46 | 41 | 34 |
| 6 | 66 | 53 | 44 | 38 | 63 | 51 | 43 | 48 | 41 | 36 | 30 |
| 7 | 62 | 48 | 40 | 34 | 59 | 47 | 39 | 44 | 37 | 31 | 26 |
| 8 | 57 | 44 | 36 | 30 | 55 | 43 | 35 | 40 | 33 | 28 | 24 |
| 9 | 54 | 40 | 32 | 27 | 51 | 39 | 32 | 37 | 30 | 25 | 21 |
| 10 | 50 | 37 | 29 | 24 | 48 | 36 | 29 | 34 | 27 | 23 | 19 |

**AVG LUMINANCE (cd/m2)**

| | 0° | 90° | 180° |
|---|---|---|---|
| 0° | 6256 | 6256 | 6256 |
| 5° | 5861 | 6176 | 5637 |
| 15° | 5755 | 5938 | 4372 |
| 25° | 5140 | 5626 | 3251 |
| 35° | 4026 | 5197 | 2490 |
| 45° | 2669 | 4705 | 2100 |
| 55° | 1851 | 4102 | 1750 |
| 65° | 1271 | 3549 | 1455 |
| 75° | 914 | 2634 | 1151 |
| 85° | 681 | 1322 | 842 |

**ZONAL LUMEN SUMMARY**

| Zone | Lumens | %Fixture |
|---|---|---|
| 0-30° | 142 | 22.3% |
| 0-40° | 230 | 36.1% |
| 0-60° | 390 | 61.4% |
| 0-90° | 527 | 82.8% |
| 90-130° | 76 | 12.0% |
| 90-150° | 101 | 15.8% |
| 90-180° | 110 | 17.2% |
| 0-180° | 636 | 100.0% |

# ModiFly wall with Tunable White PoE

## ModiFly – 4ft wall with Tunable White Photometrics

| Lumen Package | Nominal CRI & CCT | Flux (lm) | Watts (W) | Efficacy (lm/W) | CRI | R9 | WELL** | Photometry Report | IES File | Revit/BIM |
|---|---|---|---|---|---|---|---|---|---|---|
| 1000 lm/4ft | 2700K 80 CRI | 944 | 8 | 126 | 82 | 9 | Yes | PDF | IES | RFA |
| | 3000K 80 CRI | 944 | 7 | 130 | 85 | 18 | | PDF | IES | |
| | 3500K 80 CRI | 945 | 7 | 133 | 86 | 25 | | PDF | IES | |
| | 4000K 80 CRI | 945 | 7 | 135 | 87 | 28 | | PDF | IES | |
| | 4500K 80 CRI | 945 | 7 | 137 | 86 | 26 | | PDF | IES | |
| | 5000K 80 CRI | 945 | 7 | 138 | 85 | 22 | | PDF | IES | |
| | 5700K 80 CRI | 945 | 7 | 140 | 84 | 14 | | PDF | IES | |
| | 6500K 80 CRI | 945 | 7 | 139 | 83 | 9 | | PDF | IES | |
| 1500 lm/4ft | 2700K 80 CRI | 1416 | 11 | 126 | 82 | 9 | Yes | PDF | IES | RFA |
| | 3000K 80 CRI | 1416 | 11 | 130 | 85 | 18 | | PDF | IES | |
| | 3500K 80 CRI | 1417 | 11 | 133 | 86 | 25 | | PDF | IES | |
| | 4000K 80 CRI | 1417 | 11 | 135 | 87 | 28 | | PDF | IES | |
| | 4500K 80 CRI | 1417 | 10 | 137 | 86 | 26 | | PDF | IES | |
| | 5000K 80 CRI | 1418 | 10 | 138 | 85 | 22 | | PDF | IES | |
| | 5700K 80 CRI | 1418 | 10 | 140 | 84 | 14 | | PDF | IES | |
| | 6500K 80 CRI | 1418 | 10 | 139 | 83 | 9 | | PDF | IES | |
| 2000 lm/4ft | 2700K 80 CRI | 1894 | 15 | 125 | 82 | 9 | Yes | PDF | IES | RFA |
| | 3000K 80 CRI | 1892 | 15 | 130 | 85 | 18 | | PDF | IES | |
| | 3500K 80 CRI | 1889 | 14 | 132 | 86 | 25 | | PDF | IES | |
| | 4000K 80 CRI | 1887 | 14 | 134 | 87 | 28 | | PDF | IES | |
| | 4500K 80 CRI | 1885 | 14 | 136 | 86 | 26 | | PDF | IES | |
| | 5000K 80 CRI | 1884 | 14 | 137 | 85 | 22 | | PDF | IES | |
| | 5700K 80 CRI | 1882 | 14 | 139 | 84 | 14 | | PDF | IES | |
| | 6500K 80 CRI | 1881 | 14 | 137 | 83 | 9 | | PDF | IES | |
| 2500 lm/4ft | 2700K 80 CRI | 2359 | 19 | 124 | 82 | 9 | Yes | PDF | IES | RFA |
| | 3000K 80 CRI | 2366 | 18 | 129 | 85 | 18 | | PDF | IES | |
| | 3500K 80 CRI | 2373 | 18 | 131 | 86 | 25 | | PDF | IES | |
| | 4000K 80 CRI | 2379 | 18 | 133 | 87 | 27 | | PDF | IES | |
| | 4500K 80 CRI | 2384 | 18 | 135 | 86 | 26 | | PDF | IES | |
| | 5000K 80 CRI | 2388 | 18 | 136 | 85 | 22 | | PDF | IES | |
| | 5700K 80 CRI | 2393 | 17 | 138 | 84 | 14 | | PDF | IES | |
| | 6500K 80 CRI | 2395 | 18 | 136 | 83 | 9 | | PDF | IES | |
| 3000 lm/4ft | 2700K 80 CRI | 2831 | 23 | 123 | 82 | 9 | N/A | PDF | IES | RFA |
| | 3000K 80 CRI | 2827 | 22 | 128 | 85 | 18 | | PDF | IES | |
| | 3500K 80 CRI | 2824 | 22 | 130 | 86 | 25 | | PDF | IES | |
| | 4000K 80 CRI | 2821 | 21 | 132 | 87 | 28 | | PDF | IES | |
| | 4500K 80 CRI | 2818 | 21 | 134 | 86 | 26 | | PDF | IES | |
| | 5000K 80 CRI | 2816 | 21 | 135 | 85 | 22 | | PDF | IES | |
| | 5700K 80 CRI | 2813 | 21 | 137 | 84 | 14 | | PDF | IES | |
| | 6500K 80 CRI | 2812 | 21 | 135 | 83 | 9 | | PDF | IES | |
| 3500 lm/4ft | 2700K 80 CRI | 3334 | 30 | 111 | 82 | 9 | N/A | PDF | IES | RFA |
| | 3000K 80 CRI | 3334 | 28 | 118 | 85 | 18 | | PDF | IES | |
| | 3500K 80 CRI | 3335 | 28 | 121 | 86 | 25 | | PDF | IES | |
| | 4000K 80 CRI | 3335 | 27 | 123 | 87 | 28 | | PDF | IES | |
| | 4500K 80 CRI | 3335 | 27 | 125 | 86 | 26 | | PDF | IES | |
| | 5000K 80 CRI | 3336 | 26 | 126 | 85 | 22 | | PDF | IES | |
| | 5700K 80 CRI | 3336 | 26 | 128 | 84 | 14 | | PDF | IES | |
| | 6500K 80 CRI | 3336 | 27 | 125 | 83 | 9 | | PDF | IES | |

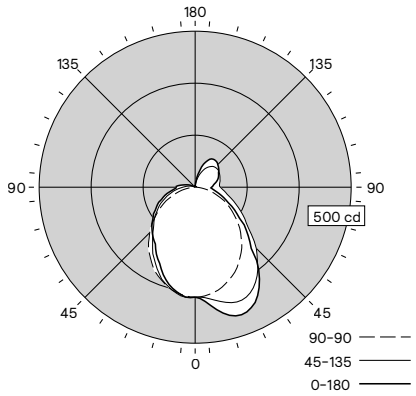


17% Up / 83% Down

### CANDELA DISTRIBUTION

| Vertical Angle | Horizontal Angle 0° | 45° | 90° | 135° | 180° | Zonal Lumens |
|---|---|---|---|---|---|---|
| 0° | 650 | 650 | 650 | 650 | 650 | |
| 5° | 678 | 655 | 645 | 653 | 652 | 63 |
| 15° | 784 | 705 | 612 | 609 | 596 | 184 |
| 25° | 785 | 716 | 554 | 532 | 497 | 280 |
| 35° | 663 | 639 | 473 | 439 | 410 | 324 |
| 45° | 458 | 511 | 380 | 350 | 360 | 317 |
| 55° | 320 | 369 | 279 | 288 | 303 | 279 |
| 65° | 216 | 281 | 189 | 224 | 247 | 224 |
| 75° | 147 | 208 | 97 | 157 | 185 | 166 |
| 85° | 100 | 164 | 26 | 99 | 124 | 115 |
| 90 | 97 | 149 | 8 | 73 | 112 | |
| 95° | 106 | 144 | 8 | 54 | 102 | 86 |
| 105° | 131 | 153 | 9 | 24 | 55 | 73 |
| 115° | 152 | 161 | 9 | 5 | 24 | 65 |
| 125° | 171 | 169 | 8 | 4 | 5 | 59 |
| 135° | 189 | 167 | 7 | 5 | 6 | 51 |
| 145° | 198 | 148 | 5 | 4 | 6 | 39 |
| 155° | 173 | 109 | 4 | 4 | 6 | 23 |
| 165° | 97 | 57 | 4 | 4 | 5 | 9 |
| 175° | 23 | 11 | 4 | 4 | 4 | 1 |
| 180° | 4 | 4 | 4 | 4 | 4 | |

Values per 4ft. Fixture photometry has been conducted in accordance with IESNA LM-79-08. IES files for this and other options can be downloaded online at ledalite.com.
*Luminaires painted in finishes other than standard white result in an up to 21% drop in light flux and efficacy. DLC is only available for configurations with a standard white finish and no battery pack.
**The WELL Building Standard® is the first standard to integrate human health and wellness into the design,construction, maintenance and operations of buildings.
Select ModiFly configurations contribute toward satisfying features L04 and L07 under the WELL Building Standard®.

*Photometric data shown is for 2500 lm/4ft, 3500K, 80 CRI configuration

### COEFFICIENTS OF UTILIZATION (%)

| Pc--- | 80 | | | | 70 | | | 50 | | | 0 |
|---|---|---|---|---|---|---|---|---|---|---|---|
| Pw--- | 70 | 50 | 30 | 10 | 70 | 50 | 30 | 50 | 30 | 10 | 0 |
| RCR | | | | | | | | | | | |
| 0 | 115 | 115 | 115 | 115 | 110 | 110 | 110 | 102 | 102 | 102 | 83 |
| 1 | 104 | 98 | 94 | 89 | 99 | 94 | 90 | 87 | 84 | 80 | 66 |
| 2 | 94 | 85 | 78 | 72 | 90 | 82 | 75 | 76 | 70 | 66 | 55 |
| 3 | 86 | 75 | 67 | 60 | 82 | 72 | 64 | 66 | 60 | 55 | 46 |
| 4 | 78 | 66 | 57 | 51 | 75 | 64 | 56 | 59 | 52 | 47 | 39 |
| 5 | 72 | 59 | 50 | 44 | 69 | 57 | 49 | 53 | 46 | 41 | 34 |
| 6 | 66 | 53 | 44 | 38 | 63 | 51 | 43 | 48 | 41 | 36 | 30 |
| 7 | 62 | 48 | 40 | 34 | 59 | 47 | 39 | 44 | 37 | 31 | 26 |
| 8 | 57 | 44 | 36 | 30 | 55 | 43 | 35 | 40 | 33 | 28 | 24 |
| 9 | 54 | 40 | 32 | 27 | 51 | 39 | 32 | 37 | 30 | 25 | 21 |
| 10 | 50 | 37 | 29 | 24 | 48 | 36 | 29 | 34 | 27 | 23 | 19 |

### AVG LUMINANCE (cd/m2)

| | 0° | 90° | 180° |
|---|---|---|---|
| 0° | 11748 | 11748 | 11748 |
| 5° | 11008 | 11648 | 10587 |
| 15° | 10805 | 11298 | 8209 |
| 25° | 9652 | 10799 | 6104 |
| 35° | 7562 | 10084 | 4677 |
| 45° | 5014 | 9249 | 3942 |
| 55° | 3475 | 8202 | 3286 |
| 65° | 2387 | 7293 | 2731 |
| 75° | 1714 | 5718 | 2162 |
| 85° | 1279 | 3368 | 1582 |

### ZONAL LUMEN SUMMARY

| Zone | Lumens | %Fixture |
|---|---|---|
| 0-30° | 527 | 22.3% |
| 0-40° | 851 | 36.1% |
| 0-60° | 1447 | 61.4% |
| 0-90° | 1953 | 82.8% |
| 90-130° | 283 | 12.0% |
| 90-150° | 373 | 15.8% |
| 90-180° | 406 | 17.2% |
| 0-180° | 2359 | 100.0% |

# ModiFly wall with Tunable White PoE

## ModiFly – 2ft wall with Tunable White Photometrics

| Lumen Package (per 4ft) | Nominal CRI & CCT | Flux (lm) | Watts (W) | Efficacy (lm/W) | CRI | R9 | WELL** | Photometry Report | IES File | Revit/BIM |
|---|---|---|---|---|---|---|---|---|---|---|
| 1000 lm/4ft | 2700K 80 CRI | 470 | 4 | 125 | 82 | 9 | Yes | PDF | IES | RFA |
| | 3000K 80 CRI | 470 | 4 | 129 | 85 | 18 | | PDF | IES | |
| | 3500K 80 CRI | 470 | 4 | 132 | 86 | 25 | | PDF | IES | |
| | 4000K 80 CRI | 470 | 4 | 134 | 87 | 28 | | PDF | IES | |
| | 4500K 80 CRI | 470 | 4 | 136 | 86 | 26 | | PDF | IES | |
| | 5000K 80 CRI | 470 | 3 | 137 | 85 | 22 | | PDF | IES | |
| | 5700K 80 CRI | 470 | 3 | 139 | 84 | 14 | | PDF | IES | |
| | 6500K 80 CRI | 470 | 3 | 138 | 83 | 9 | | PDF | IES | |
| 1500 lm/4ft | 2700K 80 CRI | 704 | 6 | 125 | 82 | 9 | Yes | PDF | IES | RFA |
| | 3000K 80 CRI | 705 | 5 | 129 | 85 | 18 | | PDF | IES | |
| | 3500K 80 CRI | 705 | 5 | 132 | 86 | 25 | | PDF | IES | |
| | 4000K 80 CRI | 705 | 5 | 134 | 87 | 28 | | PDF | IES | |
| | 4500K 80 CRI | 705 | 5 | 136 | 86 | 26 | | PDF | IES | |
| | 5000K 80 CRI | 705 | 5 | 137 | 85 | 22 | | PDF | IES | |
| | 5700K 80 CRI | 705 | 5 | 139 | 84 | 14 | | PDF | IES | |
| | 6500K 80 CRI | 705 | 5 | 138 | 83 | 9 | | PDF | IES | |
| 2000 lm/4ft | 2700K 80 CRI | 942 | 8 | 125 | 82 | 9 | Yes | PDF | IES | RFA |
| | 3000K 80 CRI | 941 | 7 | 129 | 85 | 18 | | PDF | IES | |
| | 3500K 80 CRI | 940 | 7 | 131 | 86 | 25 | | PDF | IES | |
| | 4000K 80 CRI | 939 | 7 | 133 | 87 | 28 | | PDF | IES | |
| | 4500K 80 CRI | 938 | 7 | 135 | 86 | 26 | | PDF | IES | |
| | 5000K 80 CRI | 937 | 7 | 136 | 85 | 22 | | PDF | IES | |
| | 5700K 80 CRI | 936 | 7 | 138 | 84 | 14 | | PDF | IES | |
| | 6500K 80 CRI | 936 | 7 | 137 | 83 | 9 | | PDF | IES | |
| 2500 lm/4ft | 2700K 80 CRI | 1173 | 10 | 123 | 82 | 9 | Yes | PDF | IES | RFA |
| | 3000K 80 CRI | 1177 | 9 | 128 | 85 | 18 | | PDF | IES | |
| | 3500K 80 CRI | 1181 | 9 | 131 | 86 | 25 | | PDF | IES | |
| | 4000K 80 CRI | 1184 | 9 | 132 | 87 | 27 | | PDF | IES | |
| | 4500K 80 CRI | 1186 | 9 | 134 | 86 | 26 | | PDF | IES | |
| | 5000K 80 CRI | 1188 | 9 | 135 | 85 | 22 | | PDF | IES | |
| | 5700K 80 CRI | 1191 | 9 | 137 | 84 | 14 | | PDF | IES | |
| | 6500K 80 CRI | 1192 | 9 | 135 | 83 | 9 | | PDF | IES | |
| 3000 lm/4ft | 2700K 80 CRI | 1408 | 12 | 122 | 82 | 9 | N/A | PDF | IES | RFA |
| | 3000K 80 CRI | 1407 | 11 | 127 | 85 | 18 | | PDF | IES | |
| | 3500K 80 CRI | 1405 | 11 | 130 | 86 | 25 | | PDF | IES | |
| | 4000K 80 CRI | 1403 | 11 | 132 | 87 | 28 | | PDF | IES | |
| | 4500K 80 CRI | 1402 | 11 | 133 | 86 | 26 | | PDF | IES | |
| | 5000K 80 CRI | 1401 | 10 | 135 | 85 | 22 | | PDF | IES | |
| | 5700K 80 CRI | 1400 | 10 | 136 | 84 | 14 | | PDF | IES | |
| | 6500K 80 CRI | 1399 | 10 | 134 | 83 | 9 | | PDF | IES | |
| 3500 lm/4ft | 2700K 80 CRI | 1659 | 14 | 121 | 82 | 9 | N/A | PDF | IES | RFA |
| | 3000K 80 CRI | 1659 | 13 | 126 | 85 | 18 | | PDF | IES | |
| | 3500K 80 CRI | 1659 | 13 | 128 | 86 | 25 | | PDF | IES | |
| | 4000K 80 CRI | 1659 | 13 | 130 | 87 | 28 | | PDF | IES | |
| | 4500K 80 CRI | 1659 | 13 | 132 | 86 | 26 | | PDF | IES | |
| | 5000K 80 CRI | 1659 | 13 | 133 | 85 | 22 | | PDF | IES | |
| | 5700K 80 CRI | 1660 | 12 | 134 | 84 | 14 | | PDF | IES | |
| | 6500K 80 CRI | 1660 | 13 | 132 | 83 | 9 | | PDF | IES | |

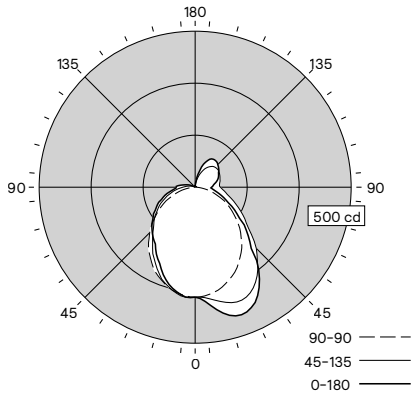


17% Up / 83% Down

### CANDELA DISTRIBUTION

| Vertical Angle | Horizontal Angle 0° | 45° | 90° | 135° | 180° | Zonal Lumens |
|---|---|---|---|---|---|---|
| 0° | 324 | 324 | 324 | 324 | 324 | |
| 5° | 337 | 326 | 321 | 325 | 324 | 31 |
| 15° | 390 | 351 | 305 | 303 | 296 | 92 |
| 25° | 391 | 356 | 276 | 265 | 247 | 139 |
| 35° | 330 | 318 | 236 | 218 | 204 | 161 |
| 45° | 228 | 254 | 189 | 174 | 179 | 158 |
| 55° | 159 | 184 | 139 | 143 | 151 | 139 |
| 65° | 107 | 140 | 94 | 111 | 123 | 112 |
| 75° | 73 | 104 | 48 | 78 | 92 | 83 |
| 85° | 50 | 82 | 13 | 49 | 62 | 57 |
| 90 | 48 | 74 | 4 | 36 | 56 | |
| 95° | 53 | 72 | 4 | 27 | 51 | 43 |
| 105° | 65 | 76 | 4 | 12 | 27 | 36 |
| 115° | 76 | 80 | 4 | 3 | 12 | 32 |
| 125° | 85 | 84 | 4 | 2 | 3 | 29 |
| 135° | 94 | 83 | 3 | 2 | 3 | 26 |
| 145° | 99 | 74 | 3 | 2 | 3 | 20 |
| 155° | 86 | 54 | 2 | 2 | 3 | 12 |
| 165° | 48 | 28 | 2 | 2 | 2 | 4 |
| 175° | 12 | 5 | 2 | 2 | 2 | 1 |
| 180° | 2 | 2 | 2 | 2 | 2 | |

Values per 2ft. Fixture photometry has been conducted in accordance with IESNA LM-79-08. IES files for this and other options can be downloaded online at ledalite.com.
*Luminaires painted in finishes other than standard white result in an up to 21% drop in light flux and efficacy. DLC is only available for configurations with a standard white finish and no battery packs.
**The WELL Building Standard® is the first standard to integrate human health and wellness into the design,construction, maintenance and operations of buildings.
Select ModiFly configurations contribute toward satisfying features L04 and L07 under the WELL Building Standard®.

*Photometric data shown is for 2500 lm/4ft, 3500K, 80 CRI configuration

### COEFFICIENTS OF UTILIZATION (%)

| Pc--- | 80 | | | | 70 | | | 50 | | | 0 |
|---|---|---|---|---|---|---|---|---|---|---|---|
| Pw--- | 70 | 50 | 30 | 10 | 70 | 50 | 30 | 50 | 30 | 10 | 0 |
| RCR | | | | | | | | | | | |
| 0 | 115 | 115 | 115 | 115 | 110 | 110 | 110 | 102 | 102 | 102 | 83 |
| 1 | 104 | 98 | 94 | 89 | 99 | 94 | 90 | 87 | 83 | 80 | 66 |
| 2 | 94 | 85 | 78 | 72 | 90 | 82 | 75 | 76 | 70 | 66 | 55 |
| 3 | 86 | 75 | 67 | 60 | 82 | 72 | 64 | 66 | 60 | 55 | 46 |
| 4 | 78 | 66 | 57 | 51 | 75 | 64 | 56 | 59 | 52 | 47 | 39 |
| 5 | 72 | 59 | 50 | 44 | 69 | 57 | 49 | 53 | 46 | 41 | 34 |
| 6 | 66 | 53 | 44 | 38 | 63 | 51 | 43 | 48 | 41 | 36 | 30 |
| 7 | 62 | 48 | 40 | 34 | 59 | 47 | 39 | 44 | 37 | 31 | 26 |
| 8 | 57 | 44 | 36 | 30 | 55 | 43 | 35 | 40 | 33 | 28 | 24 |
| 9 | 54 | 40 | 32 | 27 | 51 | 39 | 32 | 37 | 30 | 25 | 21 |
| 10 | 50 | 37 | 29 | 24 | 48 | 36 | 29 | 34 | 27 | 23 | 19 |

### AVG LUMINANCE (cd/m2)

| | 0° | 90° | 180° |
|---|---|---|---|
| 0° | 11545 | 11545 | 11545 |
| 5° | 10815 | 11397 | 10404 |
| 15° | 10616 | 10958 | 8066 |
| 25° | 9484 | 10379 | 5997 |
| 35° | 7431 | 9592 | 4596 |
| 45° | 4927 | 8685 | 3874 |
| 55° | 3415 | 7562 | 3229 |
| 65° | 2346 | 6542 | 2685 |
| 75° | 1684 | 4867 | 2125 |
| 85° | 1258 | 2433 | 1556 |

### ZONAL LUMEN SUMMARY

| Zone | Lumens | %Fixture |
|---|---|---|
| 0-30° | 262 | 22.3% |
| 0-40° | 424 | 36.1% |
| 0-60° | 720 | 61.4% |
| 0-90° | 972 | 82.8% |
| 90-130° | 141 | 12.0% |
| 90-150° | 186 | 15.8% |
| 90-180° | 202 | 17.2% |
| 0-180° | 1174 | 100.0% |

# ModiFly wall with PoE

## ModiFly – 4ft wall with PoE Photometrics

| Lumen Package | Nominal CRI & CCT | Flux (lm) | Watts (W) | Efficacy (lm/W) | CRI | R9 | WELL** | Photometry Report | IES File | Revit/BIM |
|---|---|---|---|---|---|---|---|---|---|---|
| 1000 lm/4ft | 2700K 80 CRI | 840 | 8 | 102 | 82 | 5 | Yes | PDF | IES | RFA |
| | 3000K 80 CRI | 889 | 8 | 108 | 83 | 10 | | PDF | IES | |
| | 3500K 80 CRI | 912 | 8 | 111 | 84 | 11 | | PDF | IES | |
| | 4000K 80 CRI | 955 | 8 | 117 | 81 | 4 | | PDF | IES | |
| | 5000K 80 CRI | 955 | 8 | 117 | 83 | 15 | | PDF | IES | |
| | 3500K 90 CRI | 968 | 9 | 103 | 93 | 67 | | PDF | IES | |
| 1500 lm/4ft | 2700K 80 CRI | 1279 | 11 | 116 | 82 | 5 | Yes | PDF | IES | RFA |
| | 3000K 80 CRI | 1354 | 11 | 123 | 83 | 10 | | PDF | IES | |
| | 3500K 80 CRI | 1389 | 11 | 126 | 84 | 11 | | PDF | IES | |
| | 4000K 80 CRI | 1455 | 11 | 132 | 81 | 4 | | PDF | IES | |
| | 5000K 80 CRI | 1456 | 11 | 132 | 83 | 15 | | PDF | IES | |
| | 3500K 90 CRI | 1475 | 13 | 113 | 93 | 67 | | PDF | IES | |
| 2000 lm/4ft | 2700K 80 CRI | 1737 | 14 | 122 | 82 | 5 | Yes | PDF | IES | RFA |
| | 3000K 80 CRI | 1839 | 14 | 129 | 83 | 10 | | PDF | IES | |
| | 3500K 80 CRI | 1874 | 14 | 131 | 84 | 11 | | PDF | IES | |
| | 4000K 80 CRI | 1961 | 14 | 137 | 81 | 4 | | PDF | IES | |
| | 5000K 80 CRI | 1962 | 14 | 137 | 83 | 15 | | PDF | IES | |
| | 3500K 90 CRI | 1963 | 17 | 115 | 93 | 67 | | PDF | IES | |
| 2500 lm/4ft | 2700K 80 CRI | 2184 | 18 | 123 | 82 | 5 | Yes | PDF | IES | RFA |
| | 3000K 80 CRI | 2312 | 18 | 131 | 83 | 10 | | PDF | IES | |
| | 3500K 80 CRI | 2350 | 18 | 133 | 84 | 11 | | PDF | IES | |
| | 4000K 80 CRI | 2460 | 18 | 139 | 81 | 4 | | PDF | IES | |
| | 5000K 80 CRI | 2461 | 18 | 139 | 83 | 15 | | PDF | IES | |
| | 3500K 90 CRI | 2459 | 21 | 116 | 93 | 67 | | PDF | IES | |
| 3000 lm/4ft | 2700K 80 CRI | 2593 | 21 | 124 | 82 | 5 | N/A | PDF | IES | RFA |
| | 3000K 80 CRI | 2745 | 21 | 131 | 83 | 10 | | PDF | IES | |
| | 3500K 80 CRI | 2796 | 21 | 134 | 84 | 11 | | PDF | IES | |
| | 4000K 80 CRI | 2927 | 21 | 140 | 81 | 4 | | PDF | IES | |
| | 5000K 80 CRI | 2928 | 21 | 140 | 83 | 15 | | PDF | IES | |
| | 3500K 90 CRI | 2934 | 26 | 113 | 93 | 67 | | PDF | IES | |
| 3500 lm/4ft | 2700K 80 CRI | 3015 | 25 | 121 | 82 | 5 | N/A | PDF | IES | RFA |
| | 3000K 80 CRI | 3250 | 25 | 130 | 84 | 11 | | PDF | IES | |
| | 3500K 80 CRI | 3250 | 25 | 130 | 84 | 11 | | PDF | IES | |
| | 4000K 80 CRI | 3402 | 25 | 136 | 81 | 4 | | PDF | IES | |
| | 5000K 80 CRI | 3403 | 25 | 136 | 83 | 15 | | PDF | IES | |
| | 3500K 90 CRI | 3394 | 30 | 112 | 93 | 67 | | PDF | IES | |

Values per 4ft. Fixture photometry has been conducted in accordance with IESNA LM-79-08. IES files for this and other options can be downloaded online at ledalite.com.
*Luminaires painted in finishes other than standard white result in an up to 21% drop in light flux and efficacy. DLC is only available for configurations with a standard white finish and no battery pack.
**The WELL Building Standard® is the first standard to integrate human health and wellness into the design,construction, maintenance and operations of buildings.
Select ModiFly configurations contribute toward satisfying features L04 and L07 under the WELL Building Standard®.

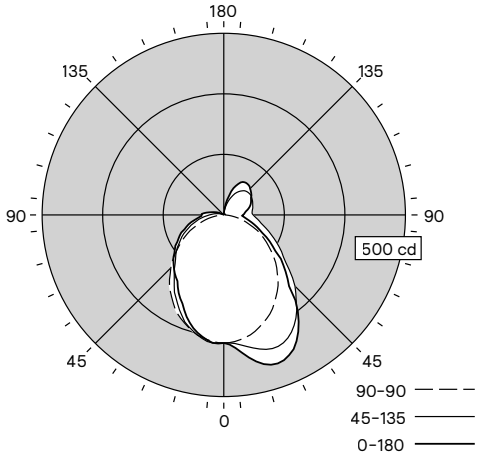


17% Up / 83% Down

**CANDELA DISTRIBUTION**

| Vertical Angle | Horizontal Angle 0° | 45° | 90° | 135° | 180° | Zonal Lumens |
|---|---|---|---|---|---|---|
| 0° | 648 | 648 | 648 | 648 | 648 | |
| 5° | 675 | 653 | 643 | 650 | 649 | 62 |
| 15° | 781 | 702 | 610 | 607 | 593 | 184 |
| 25° | 782 | 714 | 552 | 530 | 495 | 279 |
| 35° | 660 | 636 | 472 | 437 | 409 | 323 |
| 45° | 456 | 509 | 379 | 348 | 359 | 316 |
| 55° | 319 | 368 | 278 | 287 | 302 | 278 |
| 65° | 215 | 280 | 188 | 223 | 246 | 224 |
| 75° | 146 | 208 | 97 | 156 | 184 | 166 |
| 85° | 100 | 164 | 26 | 99 | 124 | 115 |
| 90 | 97 | 149 | 7 | 73 | 112 | |
| 95° | 106 | 144 | 8 | 54 | 101 | 86 |
| 105° | 131 | 152 | 9 | 23 | 55 | 73 |
| 115° | 152 | 161 | 9 | 5 | 24 | 65 |
| 125° | 171 | 169 | 8 | 4 | 5 | 58 |
| 135° | 188 | 166 | 7 | 5 | 6 | 51 |
| 145° | 198 | 147 | 5 | 4 | 6 | 39 |
| 155° | 173 | 109 | 4 | 4 | 6 | 23 |
| 165° | 96 | 57 | 4 | 4 | 5 | 9 |
| 175° | 23 | 11 | 4 | 4 | 4 | 1 |
| 180° | 4 | 4 | 4 | 4 | 4 | |

*Photometric data shown is for 2500 lm/4ft, 3500K, 80 CRI configuration

**COEFFICIENTS OF UTILIZATION (%)**

| Pc--- | 80 | | | | 70 | | | 50 | | | 0 |
|---|---|---|---|---|---|---|---|---|---|---|---|
| Pw--- | 70 | 50 | 30 | 10 | 70 | 50 | 30 | 50 | 30 | 10 | 0 |
| RCR | | | | | | | | | | | |
| 0 | 115 | 115 | 115 | 115 | 110 | 110 | 110 | 102 | 102 | 102 | 83 |
| 1 | 104 | 98 | 94 | 89 | 99 | 94 | 90 | 87 | 84 | 80 | 66 |
| 2 | 94 | 85 | 78 | 72 | 90 | 82 | 75 | 76 | 70 | 66 | 55 |
| 3 | 86 | 75 | 67 | 60 | 82 | 72 | 64 | 66 | 60 | 55 | 46 |
| 4 | 78 | 66 | 57 | 51 | 75 | 64 | 56 | 59 | 52 | 47 | 39 |
| 5 | 72 | 59 | 50 | 44 | 69 | 57 | 49 | 53 | 46 | 41 | 34 |
| 6 | 66 | 53 | 44 | 38 | 63 | 51 | 43 | 48 | 41 | 36 | 30 |
| 7 | 62 | 48 | 40 | 34 | 59 | 47 | 39 | 44 | 37 | 31 | 26 |
| 8 | 57 | 44 | 36 | 30 | 55 | 43 | 35 | 40 | 33 | 28 | 24 |
| 9 | 54 | 40 | 32 | 27 | 51 | 39 | 32 | 37 | 30 | 25 | 21 |
| 10 | 50 | 37 | 29 | 24 | 48 | 36 | 29 | 34 | 27 | 23 | 19 |

**AVG LUMINANCE (cd/m2)**

| | 0° | 90° | 180° |
|---|---|---|---|
| 0° | 11705 | 11705 | 11705 |
| 5° | 10967 | 11604 | 10548 |
| 15° | 10765 | 11255 | 8178 |
| 25° | 9616 | 10760 | 6082 |
| 35° | 7534 | 10048 | 4660 |
| 45° | 4995 | 9215 | 3928 |
| 55° | 3462 | 8173 | 3273 |
| 65° | 2378 | 7266 | 2721 |
| 75° | 1708 | 5700 | 2154 |
| 85° | 1275 | 3355 | 1577 |

**ZONAL LUMEN SUMMARY**

| Zone | Lumens | %Fixture |
|---|---|---|
| 0-30° | 525 | 22.3% |
| 0-40° | 848 | 36.1% |
| 0-60° | 1442 | 61.4% |
| 0-90° | 1946 | 82.8% |
| 90-130° | 282 | 12.0% |
| 90-150° | 372 | 15.8% |
| 90-180° | 404 | 17.2% |
| 0-180° | 2350 | 100.0% |

# ModiFly wall with PoE

## ModiFly – 2ft wall with PoE Photometrics

| Lumen Package (per 4ft) | Nominal CRI & CCT | Flux (lm) | Watts (W) | Efficacy (lm/W) | CRI | R9 | WELL** | Photometry Report | IES File | Revit/BIM |
|---|---|---|---|---|---|---|---|---|---|---|
| 1000 lm/4ft | 2700K 80 CRI | 418 | 5 | 93 | 82 | 5 | Yes | PDF | IES | RFA |
| | 3000K 80 CRI | 442 | 5 | 98 | 83 | 10 | | PDF | IES | |
| | 3500K 80 CRI | 453 | 5 | 101 | 84 | 11 | | PDF | IES | |
| | 4000K 80 CRI | 474 | 5 | 105 | 81 | 4 | | PDF | IES | |
| | 5000K 80 CRI | 474 | 5 | 105 | 83 | 15 | | PDF | IES | |
| | 3500K 90 CRI | 477 | 5 | 88 | 93 | 67 | | PDF | IES | |
| 1500 lm/4ft | 2700K 80 CRI | 636 | 6 | 108 | 82 | 5 | Yes | PDF | IES | RFA |
| | 3000K 80 CRI | 673 | 6 | 114 | 83 | 10 | | PDF | IES | |
| | 3500K 80 CRI | 691 | 6 | 117 | 84 | 11 | | PDF | IES | |
| | 4000K 80 CRI | 722 | 6 | 122 | 81 | 4 | | PDF | IES | |
| | 5000K 80 CRI | 722 | 6 | 122 | 83 | 15 | | PDF | IES | |
| | 3500K 90 CRI | 727 | 7 | 102 | 93 | 67 | | PDF | IES | |
| 2000 lm/4ft | 2700K 80 CRI | 864 | 8 | 112 | 82 | 5 | Yes | PDF | IES | RFA |
| | 3000K 80 CRI | 915 | 8 | 119 | 83 | 10 | | PDF | IES | |
| | 3500K 80 CRI | 932 | 8 | 121 | 84 | 11 | | PDF | IES | |
| | 4000K 80 CRI | 976 | 8 | 127 | 81 | 4 | | PDF | IES | |
| | 5000K 80 CRI | 976 | 8 | 127 | 83 | 15 | | PDF | IES | |
| | 3500K 90 CRI | 973 | 9 | 106 | 93 | 67 | | PDF | IES | |
| 2500 lm/4ft | 2700K 80 CRI | 1086 | 10 | 114 | 82 | 5 | Yes | PDF | IES | RFA |
| | 3000K 80 CRI | 1150 | 10 | 121 | 83 | 10 | | PDF | IES | |
| | 3500K 80 CRI | 1169 | 10 | 123 | 84 | 11 | | PDF | IES | |
| | 4000K 80 CRI | 1224 | 10 | 129 | 81 | 4 | | PDF | IES | |
| | 5000K 80 CRI | 1224 | 10 | 129 | 83 | 15 | | PDF | IES | |
| | 3500K 90 CRI | 1207 | 11 | 108 | 93 | 67 | | PDF | IES | |
| 3000 lm/4ft | 2700K 80 CRI | 1290 | 11 | 117 | 82 | 5 | N/A | PDF | IES | RFA |
| | 3000K 80 CRI | 1365 | 11 | 124 | 83 | 10 | | PDF | IES | |
| | 3500K 80 CRI | 1391 | 11 | 127 | 84 | 11 | | PDF | IES | |
| | 4000K 80 CRI | 1456 | 11 | 132 | 81 | 4 | | PDF | IES | |
| | 5000K 80 CRI | 1457 | 11 | 133 | 83 | 15 | | PDF | IES | |
| | 3500K 90 CRI | 1446 | 13 | 110 | 93 | 67 | | PDF | IES | |
| 3500 lm/4ft | 2700K 80 CRI | 1499 | 13 | 118 | 82 | 5 | N/A | PDF | IES | RFA |
| | 3000K 80 CRI | 1617 | 13 | 127 | 84 | 11 | | PDF | IES | |
| | 3500K 80 CRI | 1617 | 13 | 127 | 84 | 11 | | PDF | IES | |
| | 4000K 80 CRI | 1692 | 13 | 133 | 81 | 4 | | PDF | IES | |
| | 5000K 80 CRI | 1693 | 13 | 133 | 83 | 15 | | PDF | IES | |
| | 3500K 90 CRI | 1671 | 15 | 111 | 93 | 67 | | PDF | IES | |

Values per 2ft. Fixture photometry has been conducted in accordance with IESNA LM-79-08. IES files for this and other options can be downloaded online at ledalite.com.
*Luminaires painted in finishes other than standard white result in an up to 21% drop in light flux and efficacy. DLC is only available for configurations with a standard white finish and no battery packs.
**The WELL Building Standard® is the first standard to integrate human health and wellness into the design,construction, maintenance and operations of buildings.
Select ModiFly configurations contribute toward satisfying features L04 and L07 under the WELL Building Standard®.

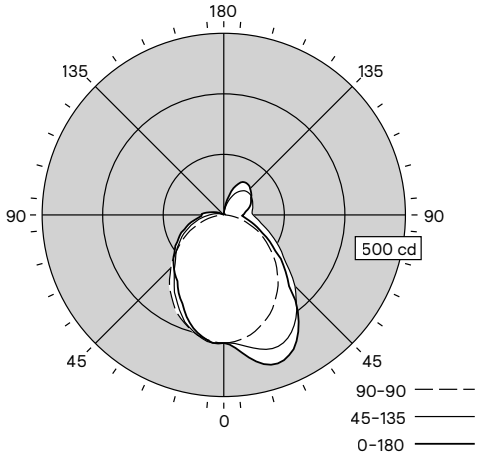


17% Up / 83% Down

### CANDELA DISTRIBUTION

| Vertical Angle | Horizontal Angle 0° | 45° | 90° | 135° | 180° | Zonal Lumens |
|---|---|---|---|---|---|---|
| 0° | 322 | 322 | 322 | 322 | 322 | |
| 5° | 336 | 325 | 320 | 324 | 323 | 31 |
| 15° | 389 | 349 | 303 | 302 | 295 | 91 |
| 25° | 389 | 355 | 275 | 264 | 246 | 139 |
| 35° | 329 | 317 | 235 | 217 | 203 | 161 |
| 45° | 227 | 253 | 189 | 173 | 178 | 157 |
| 55° | 159 | 183 | 138 | 143 | 150 | 138 |
| 65° | 107 | 139 | 94 | 111 | 122 | 111 |
| 75° | 73 | 103 | 48 | 78 | 92 | 82 |
| 85° | 50 | 81 | 13 | 49 | 61 | 57 |
| 90 | 48 | 74 | 4 | 36 | 56 | |
| 95° | 53 | 72 | 4 | 27 | 50 | 43 |
| 105° | 65 | 76 | 4 | 12 | 27 | 36 |
| 115° | 76 | 80 | 4 | 3 | 12 | 32 |
| 125° | 85 | 84 | 4 | 2 | 3 | 29 |
| 135° | 94 | 83 | 3 | 2 | 3 | 25 |
| 145° | 98 | 73 | 3 | 2 | 3 | 19 |
| 155° | 86 | 54 | 2 | 2 | 3 | 12 |
| 165° | 48 | 28 | 2 | 2 | 2 | 4 |
| 175° | 11 | 5 | 2 | 2 | 2 | 1 |
| 180° | 2 | 2 | 2 | 2 | 2 | |

*Photometric data shown is for 2500 lm/4ft, 3500K, 80 CRI configuration

### COEFFICIENTS OF UTILIZATION (%)

| Pc--- | 80 | | | | 70 | | | 50 | | | 0 |
|---|---|---|---|---|---|---|---|---|---|---|---|
| Pw--- | 70 | 50 | 30 | 10 | 70 | 50 | 30 | 50 | 30 | 10 | 0 |
| RCR | | | | | | | | | | | |
| 0 | 115 | 115 | 115 | 115 | 110 | 110 | 110 | 102 | 102 | 102 | 83 |
| 1 | 104 | 98 | 94 | 89 | 99 | 94 | 90 | 87 | 84 | 80 | 66 |
| 2 | 94 | 85 | 78 | 72 | 90 | 82 | 75 | 76 | 70 | 66 | 55 |
| 3 | 86 | 75 | 67 | 60 | 82 | 72 | 64 | 66 | 60 | 55 | 46 |
| 4 | 78 | 66 | 57 | 51 | 75 | 64 | 56 | 59 | 52 | 47 | 39 |
| 5 | 72 | 59 | 50 | 44 | 69 | 57 | 49 | 53 | 46 | 41 | 34 |
| 6 | 66 | 53 | 44 | 38 | 63 | 51 | 43 | 48 | 41 | 36 | 30 |
| 7 | 62 | 48 | 40 | 34 | 59 | 47 | 39 | 44 | 37 | 31 | 26 |
| 8 | 57 | 44 | 36 | 30 | 55 | 43 | 35 | 40 | 33 | 28 | 24 |
| 9 | 54 | 40 | 32 | 27 | 51 | 39 | 32 | 37 | 30 | 25 | 21 |
| 10 | 50 | 37 | 29 | 24 | 48 | 36 | 29 | 34 | 27 | 23 | 19 |

### AVG LUMINANCE (cd/m2)

| | 0° | 90° | 180° |
|---|---|---|---|
| 0° | 11499 | 11499 | 11499 |
| 5° | 10776 | 11354 | 10363 |
| 15° | 10576 | 10919 | 8036 |
| 25° | 9448 | 10341 | 5976 |
| 35° | 7402 | 9555 | 4578 |
| 45° | 4908 | 8653 | 3859 |
| 55° | 3402 | 7534 | 3216 |
| 65° | 2337 | 6521 | 2674 |
| 75° | 1677 | 4846 | 2116 |
| 85° | 1253 | 2433 | 1548 |

### ZONAL LUMEN SUMMARY

| Zone | Lumens | %Fixture |
|---|---|---|
| 0-30° | 261 | 22.3% |
| 0-40° | 422 | 36.1% |
| 0-60° | 717 | 61.4% |
| 0-90° | 968 | 82.8% |
| 90-130° | 140 | 12.0% |
| 90-150° | 185 | 15.8% |
| 90-180° | 201 | 17.2% |
| 0-180° | 1169 | 100.0% |

# ModiFly wall

## Optical system

The optical system contains arrays of LEDs edge lighting a low-profile light guide panel, using total internal reflection to homogenize the sources. The microstructure surface of the light guide optimizes light extraction to create an efficacious direct distribution. In addition, an extruded flush lens assembly is used to homogenize and control light from a linear array of downward-facing LEDs on the bottom of the luminaire to create an ambient 'glow' on the wall below the luminaire. Together the light guide panel and lens assembly provide a standard distribution of 83% down / 17% up.

## Construction

- Housing: Extruded architectural finish aluminum.
- Endcaps: Die-cast aluminum.
- Luminaire Weight: Max weight 3.12lbs/ft, or 15lbs/4ft.

## Finish options

- Standard powder coat finish options: Hero Gold, Venom Black, Silver Nova, White, Black, Titanium Silver

## Standard drivers

- Advance Xitanium 0-10V, 1-100%.
- Advance Xitanium SR, 5-100% (SpaceWise DT and Interact Pro)
- ETO Ready Lutron EcoSystem LDE1, 1-100% with Soft-on, Fade-to-Black
- ETO Ready PoE Lighting Controller (by Signify)
- Constant Current Class 2 rated output. Consult Ledalite for other available drivers.
- Power Factor: >0.90
- Total Harmonic Distortion: <20%

## Standard battery pack

Bodine, 90 min, 10W, Class 2 rated output.

Battery Pack lumen output = 10W x luminaire efficacy x 1.1.

Typical output: 1300lm.

## Lumen maintenance

LEDs have been tested by the manufacturer in accordance with IESNA LM-80-08. At an ambient temperature of 25°C, the LED lumen maintenance expectation according to IES TM-21-11 is: L70 (10K) > 100,000h (projected methodology).

## Source color

LEDs rated for color rendering CRI >80, R9 >0 and fixture to fixture color accuracy within 2 SDCM. Available 90 CRI option is rated for CRI >90, and R9 >50.

## Mounting

A two-piece bracket system attaches the housing to the wall structure.

## Connected systems

**SpaceWise DT**

SpaceWise is an easy to use, flexible, wireless lighting system. It allows you to create customized light zones in your office space, achieve high savings through LED technology and different dimming options, increase employee comfort through better quality of light and option to personalize light settings. Learn more at: **www.usa.lighting.philips.com/systems/lighting-systems/spacewise**

**Interact Office Wired (PoE) & Tunable White**

PoE based IoT connected lighting solution for large enterprises that span across multiple floors, buildings and require multiple gateways. Use Interact Office software and insights to increase building efficiency, achieve building wide integration and optimize space through occupancy analytics. Learn more at: **www.interact-lighting.com/office**

**Tunable White**

Signify tunable white solutions are designed to help maximize the influence of lighting on your daily life. Dynamic behaviors via scheduled lighting recipes mimicking daylight patterns or supporting biorhythms. Learn more at: **www.usa.lighting.philips.com/products/product-highlights/tunable-white-technology**

## Validation

- Luminaires are certified for safety to UL1598 and CSAC22.2. No.250.0 - Complies in accordance with CAN ICES-005-A/NEB-005-A and FCC Part 15A

## Environment

Rated for dry or damp locations in operating ambient temperatures 0-30°C (32-104°F). Certain luminaire components may be adversely affected by contaminants. Damage caused by sulfur, chlorine, petroleum based solutions or other contaminants are not covered under warranty. Not suitable for natatorium environments.

## Warranty

Five-year luminaire limited warranty including LED boards.
**www.signify.com/warranties**

The information presented in this document is not intended as any commercial offer and does not form part of any quotation or contract.

© 2019 Signify Holding. All rights reserved. The information provided herein is subject to change, without notice. Signify does not give any representation or warranty as to the accuracy or completeness of the information included herein and shall not be liable for any action in reliance thereon. The information presented in this document is not intended as any commercial offer and does not form part of any quotation or contract, unless otherwise agreed by Signify. All trademarks are owned by Signify Holding or their respective owners.

Signify North America Corporation
200 Franklin Square Drive,
Somerset, NJ 08873
Telephone 855-486-2216

Signify Canada Ltd.
281 Hillmount Road,
Markham, ON, Canada L6C 2S3
Telephone 800-668-9008

www.ledalite.com/modifly