PHILIPS

# CoralCare Controller

Gen2

Gebruiksaanwijzing
Notice d’emploi
Benutzerhandbuch
User manual
Manual de usuario

Incl.

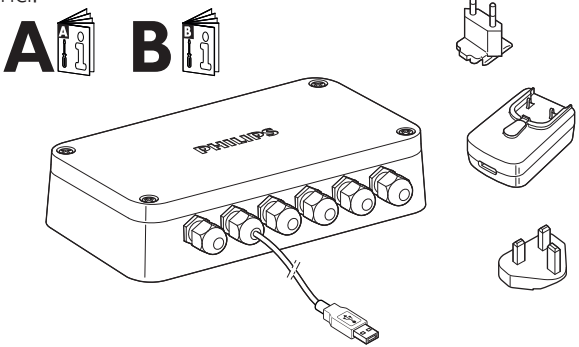
A
B
PHILIPS

Excl.

Max.
40 °C
Min.
0 °C

rH
0 - 95%

IP65

WiFi

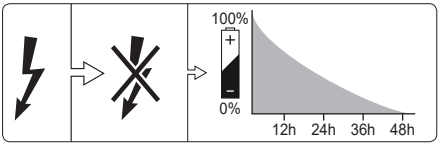
100%
0%
12h
24h
36h
48h

B

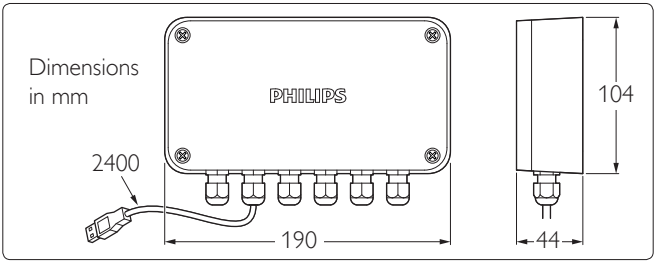
Dimensions
in mm
PHILIPS
2400
190
104
44

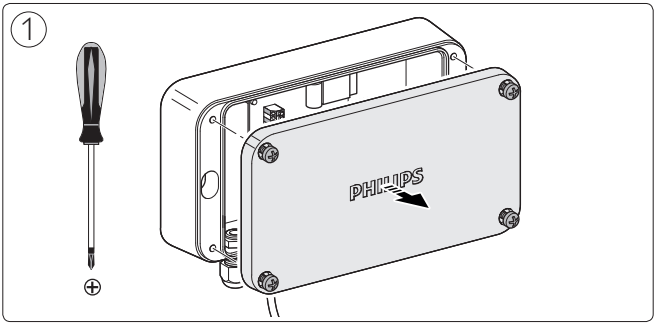
1
PHILIPS

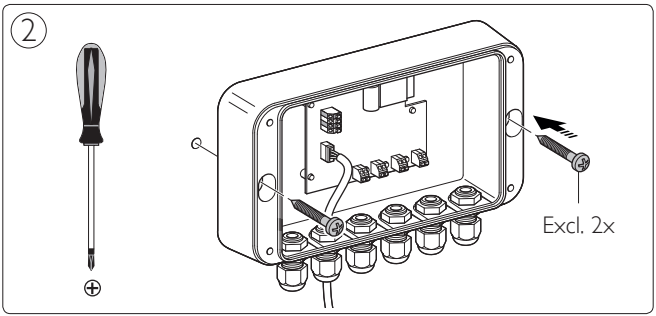
2
Excl. 2x

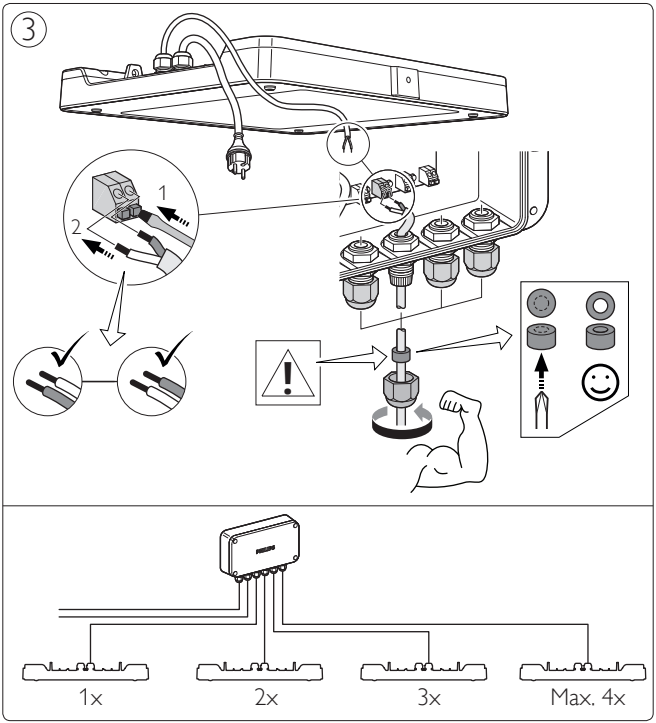


4

Options:


- "0-10V interface" See pag. 5
- "CoralCare PC application" See pag. 6
- "CoralCare app (Android & iOS)'' See pag. 7

Option: "0-10V interface"

a

1

2

35 9

Min. 2 x 0,50 mm²
Max. 2 x 1,50 mm²
Ø 6-Ø 13 mm

b 3rd party aquarium computer

Uin = 0 - 10V DC

Ch1+(Blue channel)
GND
Ch2+(White channel)
GND

2

1

2

■ Ch1+(Blue channel)
□ GND
■ Ch2+(White channel)
□ GND

Light output (%)

Max.
100

< 0.5 light OFF

Min.
1

Analog in. (V)

0 0.5 1

> 9.5

Option: "CoralCare PC application"

a

DOWNLOAD

See www.philips.com/coralcare/...

b

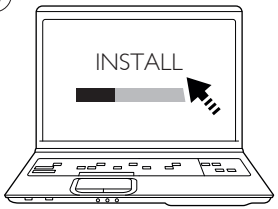


c

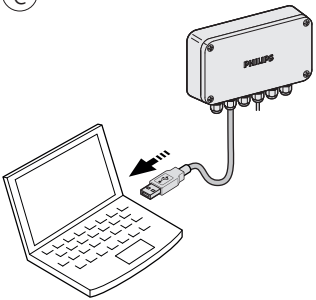


See www.philips.com/coralcare/...

d

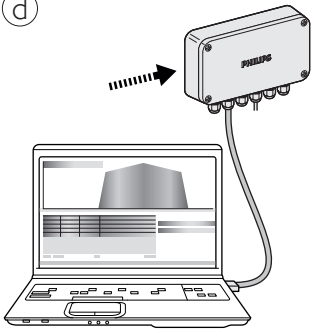


e

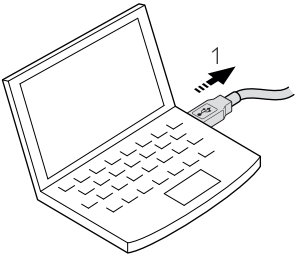

Option: "CoralCare app (Android & iOS)"

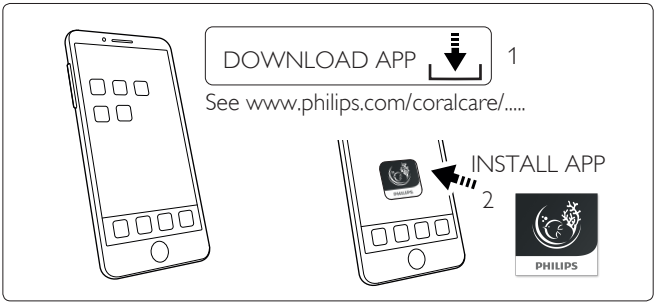


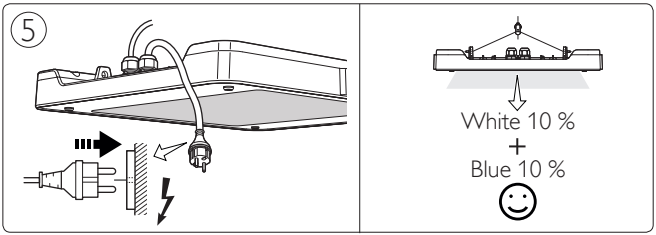


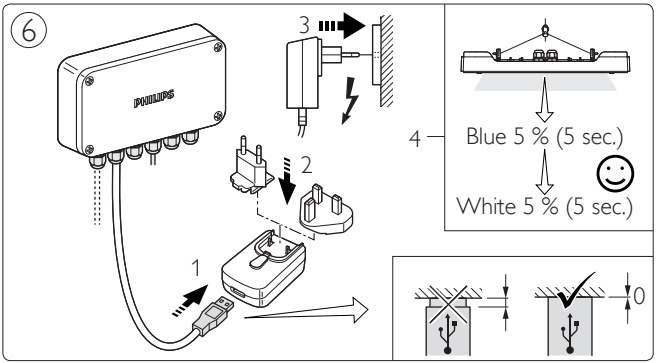

Signify
I.B.R.S. / C.C.R.I. Numéro 10461
5600 VB Eindhoven, the Netherlands

www.philips.com/coralcare
☎ +800 7445 4775

signify

© 2020 Signify Holding
All rights reserved

4443.160.22971
Last update: 15/01/20