GreenPerform Highbay G3

BY698P LED160/CW PSU NB L3000 EN

GreenPerform Highbay G3, 120 W, 16000 lm, 6500 K, 60°

Following the successful introduction of the GreenPerform Highbay G2 in 2013, while continue providing the superior light quality, long service lifetime, reduced energy consumption and less maintenance in the switch on-off (PSU) and Dali dimmable (PSD) versions, the new generation Highbay seamlessly integrates state-of-the-art LED lighting with an easy-to-use and reliable wireless ZIGBEE control solution (ACW) and simple movement detection solution (PIR). In the ACW version products, when the situation on the work floor changes, settings such as dimming levels and timing can be changed wirelessly by the end-users themselves. Luminaires can be combined in groups across the layout, and re-zoning them does not require a hardware change, thus minimising commissioning costs. The system delivers savings over and above the actual efficiency of the LEDs and is future-proof. In the PIR version products, when there has no movement detected after 15 minutes, the lighting will dimming down to 25% of the lumen output, which helps to maximum your energy saving in a simple way. Easy to understand, easy to design-in, and easy to use, GreenPerform Highbay G3 is a smart way to light up your business.

Product data

General Information	
Light source replaceable	No
Number of gear units	1 unit
Driver included	Yes
Light source engine type	LED
Service tag	Yes
CE mark	CE mark

Warranty period	3 years
Flammability mark	For mounting on normally flammable surfaces
Glow-wire test	Temperature 650 °C, duration 5 s

Light Technical	
Luminous Flux	16,000 lm

GreenPerform Highbay G3

Correlated Color Temperature (Nom)	6500 K
Luminous Efficacy (rated) (Nom)	133 lm/W
Color rendering index (CRI)	>80
Light source color	865 cool daylight
Optic type	Narrow beam
Optical cover type	Polycarbonate bowl/cover
Luminaire light beam spread	60°

Operating and Electrical

Input Voltage	220 to 240 V
Line Frequency	50 to 60 Hz
Inrush current	46 A
Inrush time	0.44 ms
Power Consumption	120 W
Power Factor (Fraction)	0.95
Connection	Flying leads/wires
Cable	Cable 3.0 m without plug
Number of products on MCB of 16 A type B	11

Temperature

Ambient temperature range	-30 to +50 °C

Controls and Dimming

Dimmable	No
Driver/power unit/transformer	Power supply unit (On/Off)
Control interface	-
Constant light output	No

Mechanical and Housing

Housing Material	Aluminum die cast
Optic material	Polycarbonate
Optical cover material	Polycarbonate
Housing Color	Dark gray
Optical cover finish	Clear
Overall height	105 mm
Overall diameter	417 mm

Approval and Application

Ingress protection code	IP65 [Dust penetration-protected, jet-proof]
Mech. impact protection code	IK07 [2 J reinforced]
Protection class IEC	Safety class I

Initial Performance (IEC Compliant)

Luminous flux tolerance	+/-10%
Initial chromaticity	(0.313.0.324)SDCM<5
Power consumption tolerance	+/-10%

Over Time Performance (IEC Compliant)

Driver failure rate at 5000 h	0.01 %
Median useful life L70B50	50,000 hour(s)
Median useful life L80B50	40,000 hour(s)
Median useful life L90B50	30,000 hour(s)

Application Conditions

Suitable for random switching	No

Product Data

Order product name	BY698P LED160/CW PSU NB L3000 EN
Full product name	BY698P LED160/CW PSU NB L3000 EN
Full product code	911401845599
Order code	911401845599
Material Nr. (12NC)	911401845599
Numerator - Quantity Per Pack	1
Numerator - Packs per outer box	1

Dimensional drawing

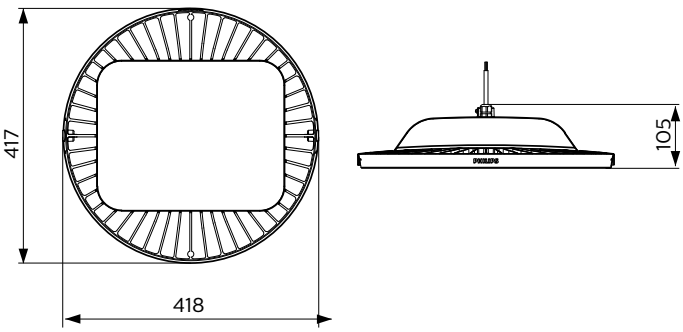

© 2023 Signify Holding All rights reserved. Signify does not give any representation or warranty as to the accuracy or completeness of the information included herein and shall not be liable for any action in reliance thereon. The information presented in this document is not intended as any commercial offer and does not form part of any quotation or contract, unless otherwise agreed by Signify. Philips and the Philips Shield Emblem are registered trademarks of Koninklijke Philips N.V.