MASTER LEDspot LV

MASTER LED 7-50W 930 MR16 36D Dim

Delivering intense accent beam, MASTER LEDspot LV is an ideal retrofit solution for spot lighting. MASTER LEDspot LV is designed to replace halogen or incandescent spots. It realizes natural colors, enables cozy and comfortable ambience for residential, hospitality and emphasizes the beauty of merchandise in retail. New smaller housing provides perfect fitting with majority of luminaires in a market with a MR16 GU 5.3 holder. It not only employs Philips' patented solution to guarantee the broadest possible compatibility with standard 12V halogen electronic transformers, it also delivers high beam intensity which is equivalent to halogen MR16 spots. The dimming function enables to create the desired atmosphere and it works with broad selection of dimmers. Its high SDCM ensure stricter color consistency, that is maintained over product life. MASTER LEDspot LV delivers huge energy savings and minimizes maintenance cost without any compromise on light quality and lifetime, enabling residential and business owners to achieve a return on their investment within short period time.

Product data

General Information	
Cap-Base	GU5.3 [GU5.3]
Nominal lifetime	40,000 hour(s)
Switching Cycle	50,000
Lighting Technology	LED
EU RoHS compliant	Yes

Light Technical	
Color Code	930 [CCT of 3000K]
Beam Angle (Nom)	36 degree(s)
Luminous Flux	500 lm
Luminous Intensity (Nom)	1,400 cd
Color Designation	White (WH)

Correlated Color Temperature (Nom)	3000 K
Luminous Efficacy (rated) (Nom)	71.00 lm/W
Color Consistency	<4
Color rendering index (CRI)	90
LLMF At End Of Nominal Lifetime (Nom)	70 %

Operating and Electrical	
Line Frequency	- Hz
Input Frequency	- Hz
Power Consumption	7 W
Lamp Current (Nom)	830 mA
Wattage Equivalent	50 W
Starting Time (Nom)	0.5 s

MASTER LEDspot LV

Warm-up time to 60% light	0.5 s
Power Factor (Fraction)	0.7
Voltage (Nom)	12 V

Temperature

T-Case Maximum (Nom)	90 °C

Controls and Dimming

Dimmable	Yes

Mechanical and Housing

Bulb Shape	MR16 [2inch/50mm]

Approval and Application

Suitable For Accent Lighting	Yes

Energy Consumption kWh/1000 h	8 kWh

Product Data

Order product name	MASTER LED 7-50W 930 MR16 36D Dim
Full product name	MASTER LED 7-50W 930 MR16 36D Dim
Full product code	871869681239600
Order code	929001880208
Material Nr. (12NC)	929001880208
Numerator - Quantity Per Pack	1
EAN/UPC - Product/Case	8718696812396
Numerator - Packs per outer box	10
EAN/UPC - Case	8718696812402

Dimensional drawing

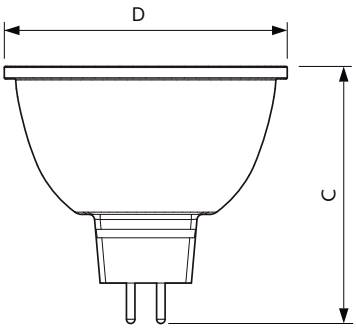

Product	D	C
MASTER LED 7-50W 930 MR16 36D Dim	50.5 mm	46.5 mm

Photometric data

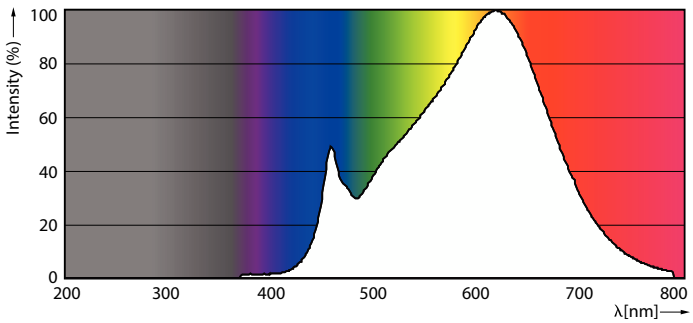

Spectral Power Distribution Colour - MASTER LED 7-50W 930 MR16 36D Dim

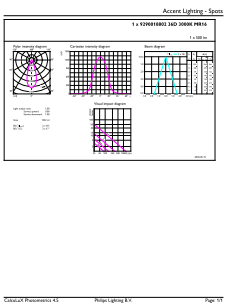

Accent Lighting Spots - MASTER LED 7-50W 930 MR16 36D Dim

MASTER LEDspot LV

Photometric data

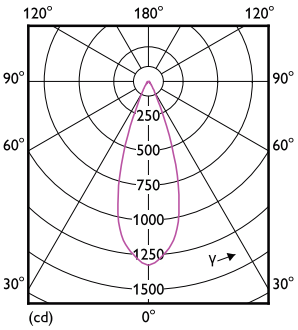

Light Distribution Diagram - MASTER LED 7-50W 930 MR16 36D Dim

Lifetime

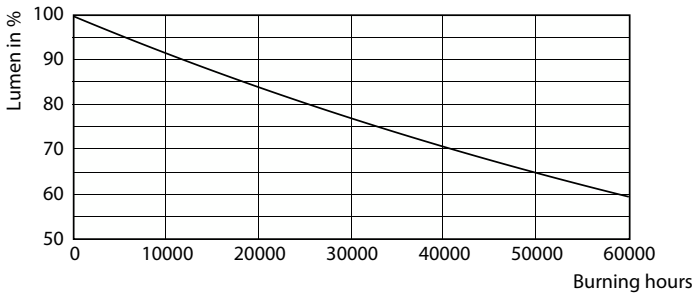

Lumen Maintenance Diagram - MASTER LED 7-50W 930 MR16 36D Dim

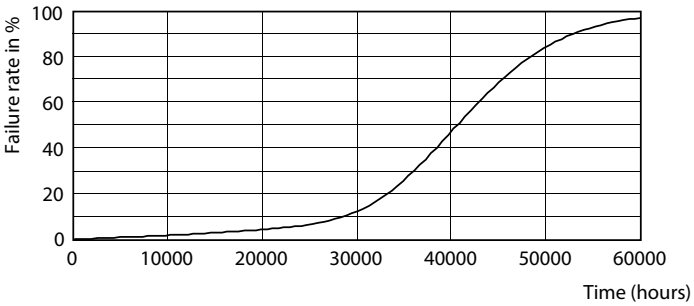

Life Expectancy Diagram - MASTER LED 7-50W 930 MR16 36D Dim

© 2023 Signify Holding All rights reserved. Signify does not give any representation or warranty as to the accuracy or completeness of the information included herein and shall not be liable for any action in reliance thereon. The information presented in this document is not intended as any commercial offer and does not form part of any quotation or contract, unless otherwise agreed by Signify. Philips and the Philips Shield Emblem are registered trademarks of Koninklijke Philips N.V.