LIGHTOLIER by signify

Downlighting

Flat Downlight LED

FDS Square 4" & 6" Apertures

Lightolier LED Flat downlight provides an easy and quick downlight solution without the traditional frame and reflector. Perfect for installation in existing ceilings or new construction with the benefits of energy saving LED technology.

Project:
Location:
Cat.No:
Type:
Lamps: Qty:
Notes:

Fixture

example: FD6S09930TE1W

Family	Size	Lumens	CRI	CCT	Dimming	Voltage	Finish
FD			9	30	TE	1	W
FD Flat Downlight	**4S** 4-inch Square	**07** 700 lm	**9** 90	**30** 3000K	**TE** Triac & ELV	**1** 120V	**W** White (matte)
	6S 6-inch Square	**09** 900 lm	**9** 90	**30** 3000K	**TE** Triac & ELV	**1** 120V	**W** White (matte)

Accessories

example: FDSN

Family	Model
FD	
FD Flat Downlight	**SN** Square new construction plate **06C** 6' extension cable **20C** 20' extension cable

Features

1. **Flange:** aluminum, painted white.
2. **Lens:** hard plastic material with diffused light pattern.
3. **Junction Box:** steel, 4 7/8" x 1 1/4" x 4 1/8" (124mm x 32.6mm x 105.2mm). Clip attached on the side of the J-box to connect with fixture or new construction plate to meet NEC (National Electric Code). J-box also has key holes on the side for mounting on joist (see page 2).
4. **Connector:** locking power connection is used to connect J-box and fixture. Standard length of the connection is 16" (400mm). Extension cable available as accessory.
5. **Ceiling cutout:** installation template on adhesive backed label is supplied with the product.
   4" square: 4 3/16" x 4 3/16 (106 x 106mm) diameter.
   6" square: 6x6" (152 x 152mm) diameter.
6. **Gasket:** foam gasket supplied with fixture.
7. **New Construction plate:** steel. 10" x 17 1/2" (254mm x 445mm). Holes on the side of the plate for mounting.

Electrical

Electronic power supply:
RoHS compliant.*
Class 2 power unit.

Remote power supply can only accommodate one LED module and cannot be shared with other LED module.

Fixture can be through wired.

Dimming: Intended for ELV/TRIAC (120V) dimming. For more details, refer to LED-DIM-DL spec sheet.

Labels

cULus listed (UL 1598) for wet locations (covered ceiling only). IC rated for direct contact with thermal insulation.

AirSeal for minimal air leakage.

ENERGY STAR® certified.

Title 24 compliant.

Warranty

Lifetime: Expected lifetime 50,000 hours and backed by a 5-year warranty (visit philips.com/warranties for details).

	Lumen output	Input voltage	Input freq	Max. input current	Max. input power	Max. THD	Power factor
4" Square	700lm	120V	60Hz	0.13A	13W	15.3%	1
6" Square	900lm	120V	60Hz	0.15A	15.5W	14%	1

* Restrictions on Hazardous Substances (RoHS) is a European directive (2002/95/EC) designed to limit the content of 6 substances [lead, mercury, cadmium, hexavalent chromium, polybrominated biphenyls (PBB), and polybrominated diphenyl ethers (PBDE)] in electrical and electronic products. For products used in North America compliance to RoHS is voluntary and self-certified.

IC INSULATION CONTACT · c UL us LISTED · RoHS COMPLIANT · ENERGY STAR

FDS Flat Downlight LED

Square 4" & 6" Apertures

Dimensions

Flat Downlight 4"

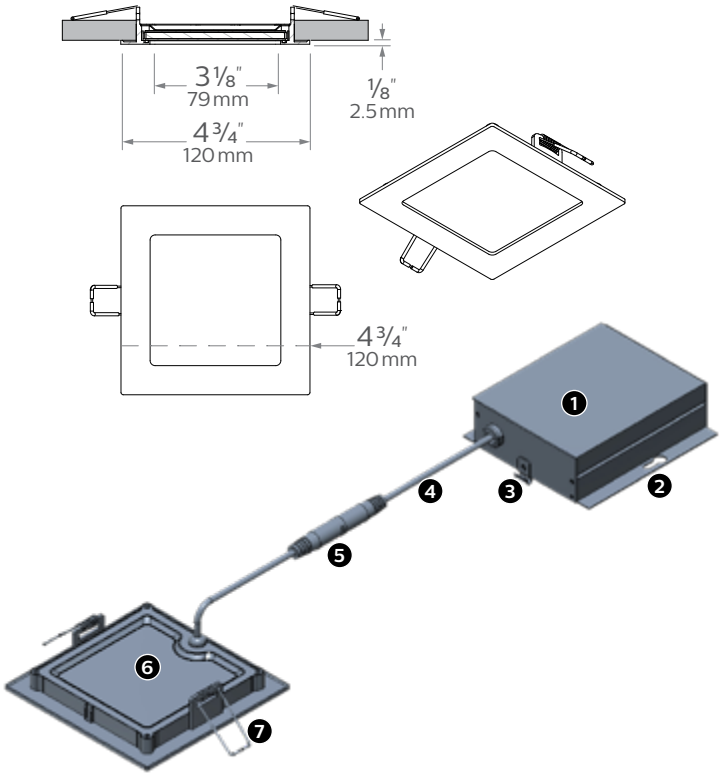

Flat Downlight 6"

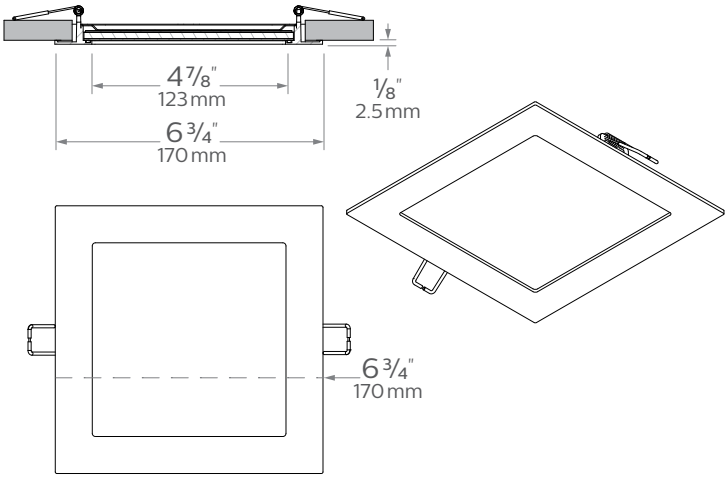

Components

1. Electrical Box with knockouts
2. Mounting keyhole
3. Remodel NEC* clip
4. 19.5" (0.5m) cord
5. Locking power connector
6. Integrated LED Luminaire
7. Spring clip for easy mounting

* National Electric Code

Frame plate

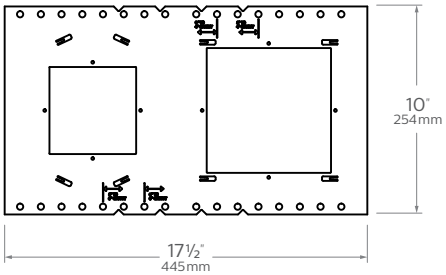

Secure J-Box to frame plate:
slide junction box clip into slot and catch finger tab.

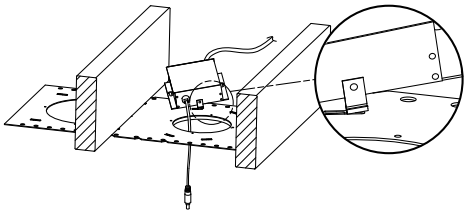

Junction box

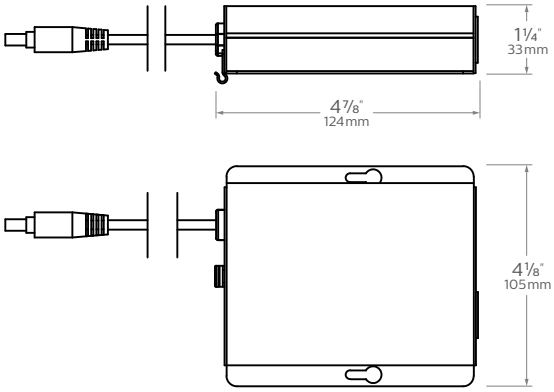

Remodeler applications:
attach junction box clip to installation spring to assure N.E.C compliance.

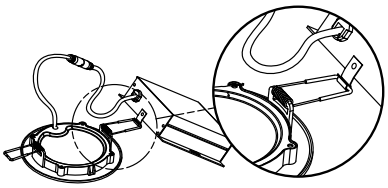

FDS Flat Downlight LED

Square 4" & 6" Apertures

4-inch, 12W, 59.0 lm/W

Candela Curve

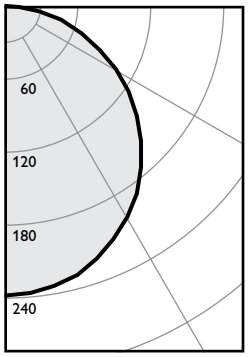

Fixture: **FD4S07930KTE1W**

Output lumens:	684 lm
Input watts:	11.6 W
CRI:	90 min
CCT[1]:	3000K
Spacing Crit.:	1.3
Beam Angle:	113°

Zonal summary

Zone	Lumens	%Luminaire
0-30	184	27.0%
0-40	302	44.1%
0-60	534	78.1%
0-90	684	100.0%

Angle	Mean CP	Lumens
0	238	
5	237	23
10	234	
15	229	64
20	221	
25	212	98
30	201	
35	188	118
40	174	
45	158	122
50	142	
55	124	110
60	105	
65	86	85
70	67	
75	48	50
80	29	
85	13	15
90	0	

Single unit data

Height to lighted plane	Initial center beam foot-candles	Beam diameter (ft)*
5'	10	6.5'
6'	7	7.8'
7'	5	9.1'
8'	4	10.4'
9'	3	11.7'

* Beam diameter is where foot-candles drop to 50% of maximum.

Multiple unit data - RCR 2

Spacing on center	Initial center beam foot-candles	Watts per sq. ft.
5'	27.3	0.51
6'	17.9	0.34
7'	12.8	0.24
8'	10.7	0.20
9'	8.5	0.16

38' x 38' x 10' Room, Workplane 2.5' above floor, 80/50/20% Reflectances

Efficacy: 59.0 lm/w
Report[2]: PR7060902

Coefficients of utilization

Ceiling	80%				70%		50%		30%		0%
Wall	70	50	30	10	50	10	50	10	50	10	0
RCR	Zonal cavity method - Effective floor reflectance = 20%										
Room Cavity Ratio 0	119	119	119	119	116	116	111	111	106	106	100
1	109	104	99	95	101	94	97	91	93	88	83
2	99	90	83	77	88	76	85	75	81	73	69
3	90	79	71	64	77	64	74	62	72	61	58
4	82	70	61	54	69	54	66	53	64	52	49
5	75	62	53	47	61	46	59	46	57	45	43
6	70	56	47	41	55	40	53	40	52	40	37
7	65	51	42	36	50	36	49	35	47	35	33
8	60	46	38	32	46	32	44	32	43	31	29
9	56	43	34	29	42	29	41	29	40	28	26
10	53	39	31	26	39	26	38	26	37	26	24

6-inch, 14W, 64.1 lm/W

Candela Curve

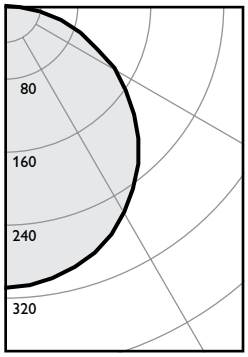

Fixture: **FD6S07930KTE1W**

Output lumens:	891 lm
Input watts:	13.9 W
CRI:	90 min
CCT[1]:	3000K
Spacing Crit.:	1.3
Beam Angle:	113°

Zonal summary

Zone	Lumens	%Luminaire
0-30	239	26.8%
0-40	391	43.9%
0-60	694	77.9%
0-90	891	100.0%

Angle	Mean CP	Lumens
0	308	
5	307	29
10	303	
15	296	83
20	287	
25	275	126
30	261	
35	245	153
40	226	
45	206	159
50	185	
55	162	144
60	138	
65	113	111
70	88	
75	63	66
80	39	
85	17	20
90	0	

Single unit data

Height to lighted plane	Initial center beam foot-candles	Beam diameter (ft)*
5'	12	6.5'
6'	9	7.8'
7'	6	9.1'
8'	5	10.4'
9'	4	11.7'

* Beam diameter is where foot-candles drop to 50% of maximum.

Multiple unit data - RCR 2

Spacing on center	Initial center beam foot-candles	Watts per sq. ft.
5'	35.6	0.62
6'	23.4	0.40
7'	16.7	0.29
8'	13.9	0.24
9'	11.1	0.19

38' x 38' x 10' Room, Workplane 2.5' above floor, 80/50/20% Reflectances

Efficacy: 64.1 lm/w
Report[2]: PR7060904

Coefficients of utilization

Ceiling	80%				70%		50%		30%		0%
Wall	70	50	30	10	50	10	50	10	50	10	0
RCR	Zonal cavity method - Effective floor reflectance = 20%										
Room Cavity Ratio 0	119	119	119	119	116	116	111	111	106	106	100
1	109	104	99	95	101	94	97	91	93	88	83
2	99	90	83	77	88	76	85	75	81	73	69
3	90	79	71	64	77	63	74	62	72	61	58
4	82	70	61	54	69	54	66	53	64	52	49
5	75	62	53	46	61	46	59	46	57	45	43
6	70	56	47	41	55	40	53	40	52	40	37
7	64	51	42	36	50	36	48	35	47	35	33
8	60	46	38	32	46	32	44	32	43	31	29
9	56	43	34	29	42	29	41	28	40	28	26
10	53	39	31	26	39	26	38	26	37	26	24

1. Correlated Color Temperature within specs as defined in ANSI_NEMA_ANSLG C78.377-2008: Specifications for the Chromaticity of Solid State Lighting Products.
2. Tested using absolute photometry as specified in LM79: IESNA Approved Method for the Electrical and Photometric Measurements of Solid-State Lighting Products.

signify

©2019 Signify Holding. All rights reserved. This document may be subject to change. No representation or warranty as to the accuracy or completeness of the information included herein is given and any liability for any action in reliance thereon is disclaimed. All trademarks are owned by Signify Holding or their respective owners.

Signify North America Corporation
200 Franklin Square Drive,
Somerset, NJ 08873
Telephone 855-486-2216

Signify Canada Ltd.
281 Hillmount Road,
Markham, ON, Canada L6C 2S3
Telephone 800-668-9008