PHILIPS

hue

Warnings
Always make sure the luminaire is detached from the mains socket
Always make sure the DC cable is detached from the power supply
Staring at the operating light source may cause eye injury

#	Disassemble/dismantle steps	Tools needed
a	Press and rotate diffuser [27] by hand counter clockwise until it unsnap.Lift the diffuser up to remove it from base [30]	-
b	Remove deco ring [26] by lifting up from the base [30]	-
c	Unplug wires from light source-led modules [11]	WAGO TOOL #2060
d	Unplug wires from light source - splitter [10]	WAGO TOOL #2060
e	Remove flat cable from the light source - splitter [10] and light source - hue connect [9]	-
f	Unscrew 2 screws [21] and remove pull relief [17] from base[30]	TORXHEAD SCREW DRIVER T10
g	Unplug wires from power supply cord [32] and light source - hue connect [9]	FLATHEAD SCREWDRIVER OR WAGO TOOL #2065
h	Unscrew 1 screw [8] and remove light source-hue connect [9]	TORXHEAD SCREW DRIVER T10
i	Unscrew 2 screws [8] and remove light source - splitter [10]	TORXHEAD SCREW DRIVER T10
j	Unscrew 14 screws [8] and remove light source -led modules [11] and plates [31] from base [30]	TORXHEAD SCREW DRIVER T10
k	Unscrew 3 screws [19] and remove washers [6] and plate [29] from base [30]	TORXHEAD SCREW DRIVER T10
l	Remove grommet [15] from plate [29]	-
m	Unscrew knurled parts in connection parts [3] press and remove 3 suspension cables from them and pull out them through holes in plate	-
n	Pry and remove plate [29] from base [30]	-
o	Unscrew 2 screws [16] and remove bracket [24] from the base [25]	CROSSHEAD SCREWDRIVER PH
p	Unscrew 6 screws [19] and remove caps [7] from base [25]	TORXHEAD SCREW DRIVER T10
q	Unscrew 3 nuts [2] and remove connection parts [3] and washers [1] from base [25]	SOCKET WRENCH
r	Unscrew 1 screw [13] and remove it from base [25]	CROSSHEAD SCREWDRIVER PZ
s	unclamp 2 close end connectors and loosen wires from control gear - psu [23] and power supply cord [32]	PINCER
t	Remove terminal blocks [12] by unscrewing wires of the control gear - psu [23],remove cover N [18] and cover L [22]	FLATHEAD SCREWDRIVER
u	Unscrew 2 screws [19] and remove control gear - psu [23] from the base [25]	TORXHEAD SCREW DRIVER T10
v	Unscrew 2 screws [20] and remove power supply cord [32] from the base [25]	TORXHEAD SCREW DRIVER T10
w	Unscrew 1 nut [2] and remove pull relief [14] and nipple [4] from base [25]	SOCKET WRENCH

#	COMPONENT	QTY
1	Washer	3
2	Nut	4
3	Connection part	3
4	Nipple	1
5	Suspension cable	3
6	Washer	3
7	Cover	3
8	Screw	17
9	Light source - hue connect	1
10	Light source - splitter	1
11	Light source -led module	7
12	Terminal block	2
13	Screw	1
14	Pull relief	1
15	Grommet	1
16	Screw	2
17	Pull relief	1
18	Cover N	1
19	Screw	11
20	Screw	2
21	Screw	2
22	Cover L	1
23	Control gear - psu	1
24	Bracket	1
25	Base	1
26	Deco ring	1
27	Diffuser	1
28	Plate	1
29	Plate	1
30	Base	1
31	Plate	7
32	Power supply cord	1

SKU	Color	Country
915005998001	White	EU/UK
915005998101	Black	EU/UK

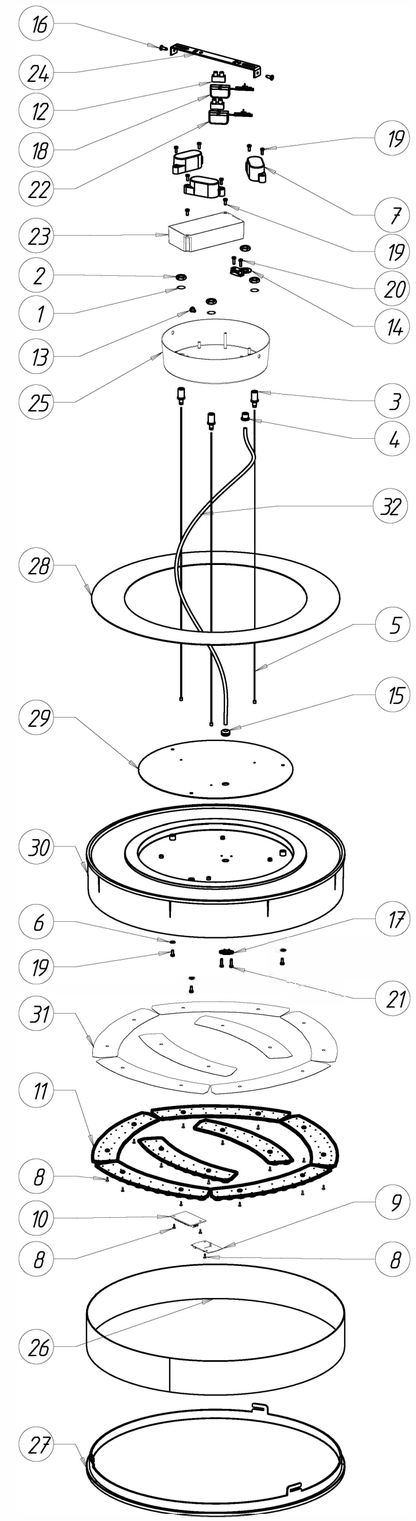

STATUS	DESCRIPTION	DESIGN ID	01	2021-06-22
	Enrave pendant white/black,Disassembly instruction	DOC 12NC		
NAME Pa Ku	LOCAL PART ID	SH. 1		A2-L
CHECKED	DATE 2021-06-22			