- Do not look directly at led light for a long time to avoid physical discomfort.
- The luminaire shall be installed by a qualified electrician and wired in accordance with the latest IEE electrical regulations or the national requirements.
- The light source contained in this luminaire shall only be replaced by the manufacturer or his service agent or a similar qualified person.
- Above average concentration of sulfur affects the useful lifetime of the product. E.g: Light color changes from white to yellow.
- For use in environments where an accumulation of conductive dust on the luminaire may be expected.
- Do not install the luminaire under water.
- Do not install the luminaire in refrigeration house.
- Do not install the luminaire in ammonia environment, such as chicken&pig farms.
- Do not install the luminaire in the environment where vibration exists.
- For outdoor operation at at building: only when all its cables run indoor, with a maximum distance of 10 meters.



	LED50S	LED70S
Ipeak [A]	20	40
Tref [µs]	150	100
	Max. Nr of products	
Drivers / MCB 16A type B [max.]	30	18
Drivers / MCB 10A type B [max.]	24	15
Drivers / MCB 16A type C [max.]	34	24
Drivers / MCB 10A type C [max.]	24	15

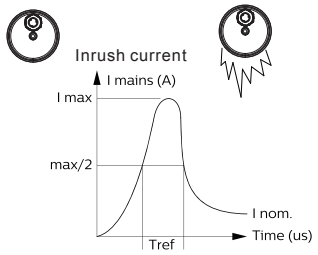

This marking indicates that this product should not be disposed with other household wastes throughout the EU. To prevent possible harm to the environment or human health from uncontrolled waste disposal, recycle itresponsibly to promote the sustainable reuse of material resources. To return your used device, please use the return and collection systems or contact the retailer where the product was purchased. They can take this product forenvironmental safe recycling.

© 2022 Signify Holding.
All rights reserved. This document contains information relating to the product portfolio of Signify which information may be subject to change. No representation or warranty as to the accuracy or completeness of the information included herein is given and any liability for any action in reliance thereon is disclaimed. The information presented in this document is not intended as any commercial ofer and does not form part of any quotation or contract. Philips and the Philips Shield Emblem are registered trademarks of Koninklijke Philips N.V.. All other trademarks are owned by Signify Holding or their respective owners.

Signify Holding.
The Netherlands

PHILIPS

Coreline Tubular Waterproof

WT210C

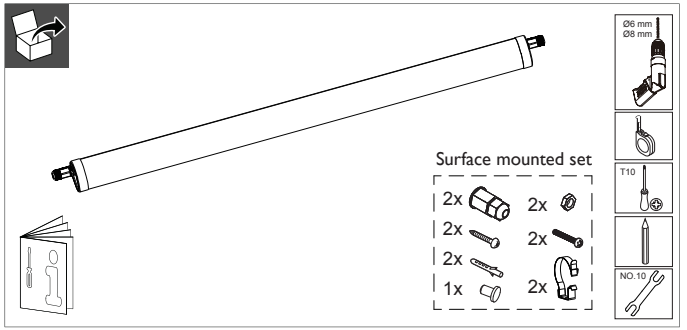

220V 240V | 50Hz 60Hz | Max. 40 °C Min. -20 °C | LIFE 50Khrs @L80 | IP68 | IK10 | GLOW WIRE 850 °C | UK CA | D

	System light output(Lm)	Color temperature(K)	Power(W)	Energy efficiency class of light source	kg
WT210C LED50S/840 PSU TW1 PC L1200	5000	4000K	39	D	1.5
WT210C LED70S/840 PSU TW1 PC L1500	7000	4000K	54	D	1.8

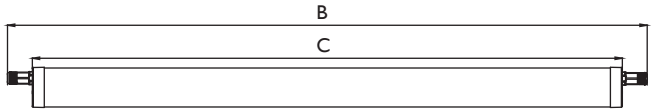

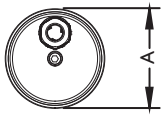

Type	Dimension(mm)		
	A	B	C
WT210C LED50S/840 PSU TW1 PC L1200	82.5	1315	1211
WT210C LED70S/840 PSU TW1 PC L1500		1615	1511

Order separate accessories

Suspension mounted set (Indoor)
911401867784 WT210Z SMS

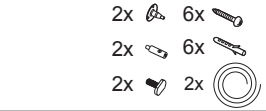

Suspension mounted set (Indoor/Outdoor)
911401867884 WT210Z SC



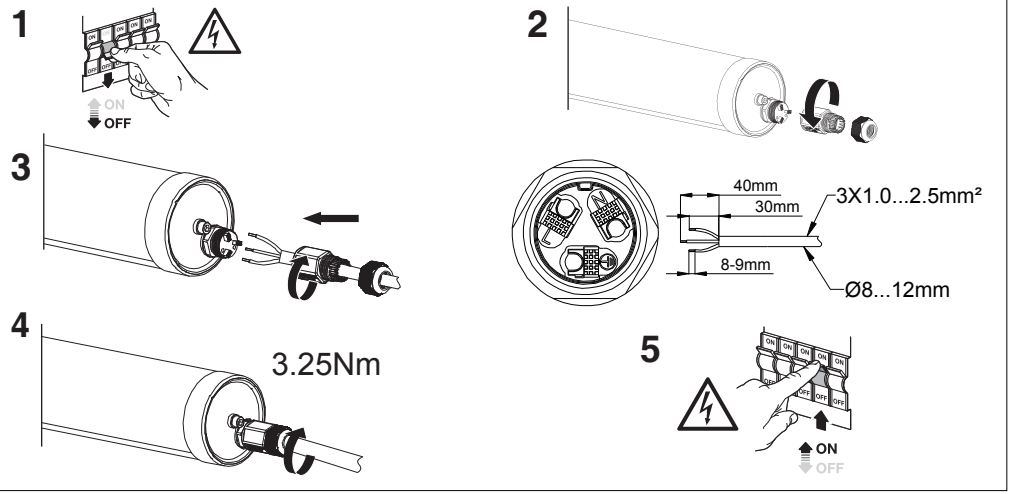

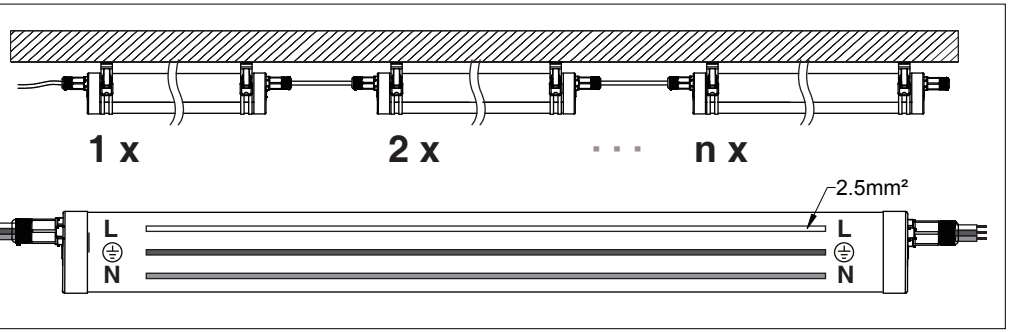

Surface mounting

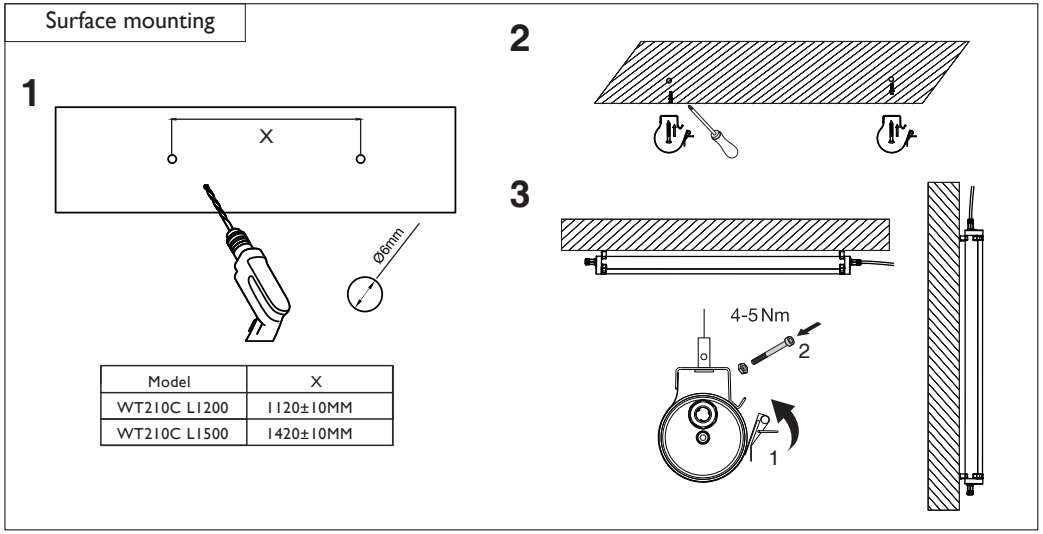

Model	X
WT210C L1200	1120±10MM
WT210C L1500	1420±10MM

Suspension mounting (Indoor)

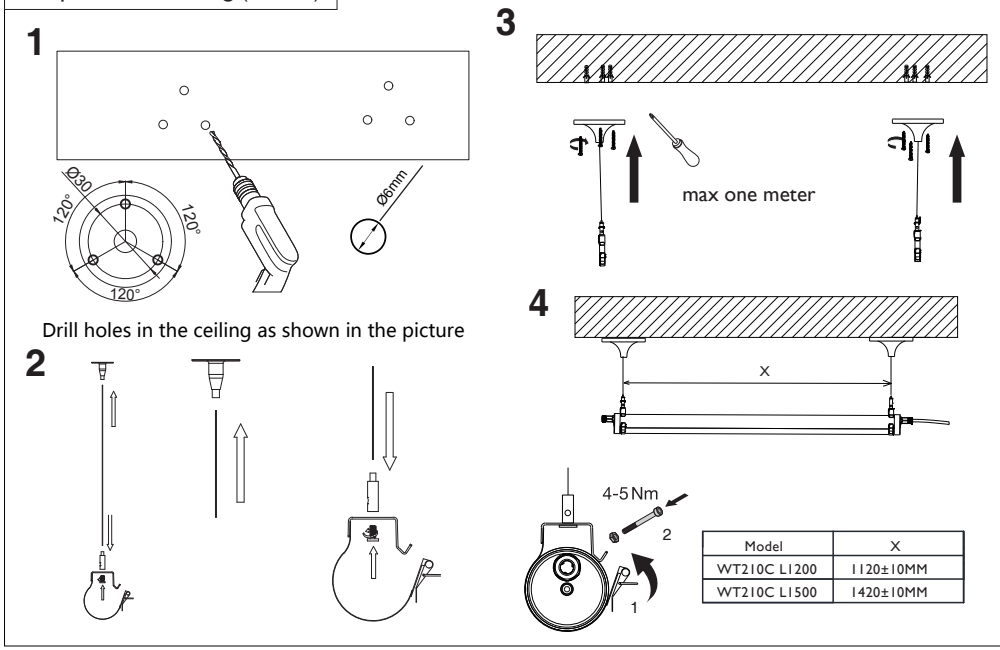

Model	X
WT210C L1200	1120±10MM
WT210C L1500	1420±10MM

Suspension mounting(Indoor/Outdoor)

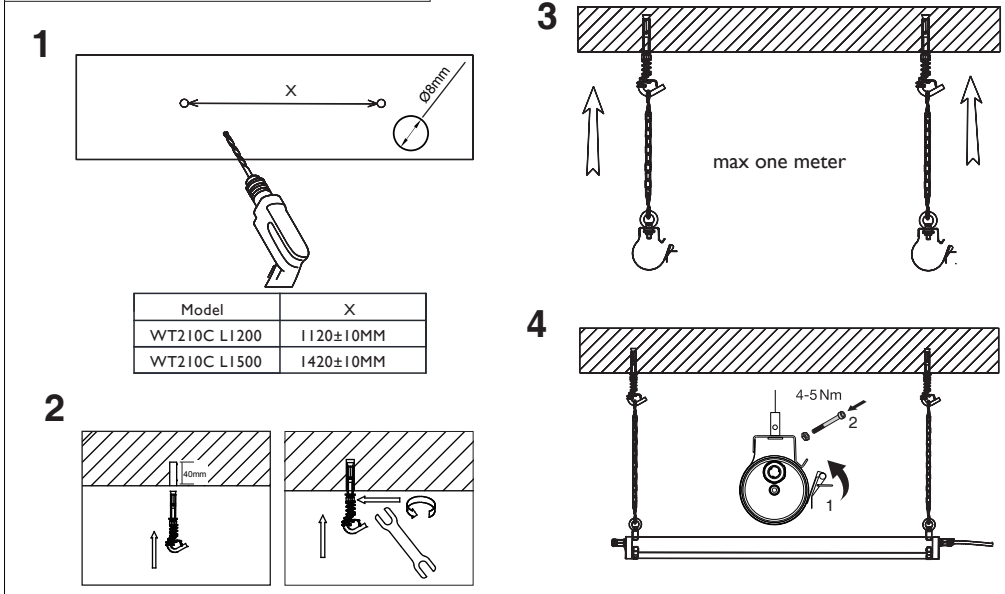

Model	X
WT210C L1200	1120±10MM
WT210C L1500	1420±10MM