LEDALITE

Linear

TruGroove

Suspended micro (lens)

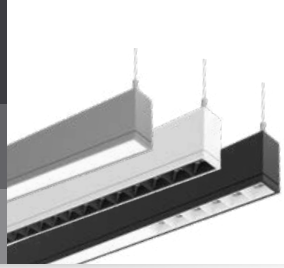

1.75" aperture

TruGroove suspended micro (lens) drives performance beyond the edge. Innovative optics deliver exceptional uniformity and wide row spacing from a 1.75" aperture continuous line of light. Unique Quad Optic louver cells offer a wide range of options from graze to stack to asymmetric wall wash exceeding the demands of the most challenging spaces.

TruGroove suspended micro includes AccuRender technology for the highest color quality at the highest efficacy

Project:

Location:

Cat.No:

Type:

Line ID: Qty:

Notes:

Ordering guide[12]

example: TM05L940QRPC230Q5008DS1NCSW, A6-1-24

Family	Version	Distribution	Source	CRI/CCT [1,5,8,16]
TM TruGroove micro	**0** Suspended	**1** Direct **3** Indirect **5** Indirect / Direct **6** Direct / Indirect	**L** LED	**950** CRI 90, 5000K **940** CRI 90, 4000K **935** CRI 90, 3500K **930** CRI 90, 3000K **927** CRI 90, 2700K **9T2** CRI 90, 2700-6500K 2ch Tunable White (confirm controls)

Optics (Direct)		Lumens (Direct)[1,16]	Optics (Indirect)	Lumens (Indirect)[1,16]	Run Length[7]
Lens Optic[9,16] **N** No lens (specify louver optic) **Q** Performance Symmetric Batwing Flush MesoOptics **W** Performance Asymmetric Wall Wash Flush MesoOptics **L** Definition Symmetric Flush Silk **D** Definition Symmetric Drop Silk **B** Definition Symmetric Flush Black	**Louver cell** (specifiy optic, color, length, position)[8,15] **N** No louver (must specify lens optic) **G** Performance 17° Graze Beam w/MesoOptics **R** Performance 27° Narrow Beam w/MesoOptics **M** Performance 48° Medium Beam w/MesoOptics **S** Performance 63° Stack Beam w/MesoOptics **Q** Performance 61° Symmetric Batwing w/MesoOptics **W** Performance 20° Asymmetric Wall Wash w/MesoOptics **K** Definition Symmetric Silk Optic **Color**: **N** None, **B** Black, **W** White, **P** Platinum, **G** Gold, **C** Copper **Length**[15]: **N** None, **C** 6in (3 Cells), **1** 1ft (6 Cells), **F** Full length **Position**[15]: **N** None, **1** One end, **2** Both ends, **F** Full length	**NN** None **40** 4000 lm/4ft **35** 3500 lm/4ft **30** 3000 lm/4ft **25** 2500 lm/4ft **20** 2000 lm/4ft **15** 1500 lm/4ft **10** 1000 lm/4ft **07** 700 lm/4ft	**N** None **Q** Performance Symmetric **W** Performance Asymmetric	**NN** None **70** 7000 lm/4ft **60** 6000 lm/4ft **50** 5000 lm/4ft **40** 4000 lm/4ft **30** 3000 lm/4ft **20** 2000 lm/4ft **10** 1000 lm/4ft	**02** 2ft **C2** 2.5ft **03** 3ft **C3** 3.5ft **04** 4ft **05** 5ft **06** 6ft **08** 8ft **XX** Continuous run in 6" increments (please specify) **Suspended Patterns:** **A4** 2ft x 2ft Flat Corner (90°)

Notes: For lens/louver combinations please select both lens and louver options. FF full length louver cannot be combined with a lens, must select N for lens option. Continuous runs available in 6in increments (please specify length).

Voltage[3]	Driver[3,5]	Circuit [2,10,11]	Wiring Opt. [2,3,6,10,13]	System/Controls [4,9,14]
D UNV 120-277V **3** 347V	**E** Advance Xitanium 0-10V (1% Dim)	**1** Single Circuit **V** Single Circuit + 1 Thru Wire (BP Trigger) **F** Single Circuit + 4 Thru Wires (Mains & Dimming) **G** Dual Circuit (Up/Down) **W** Dual Circuit (Up/Down) + 1 Thru Wire (BP Trigger)	**N** None **B** Battery Pack **E** Aux. Wiring **G** GTD (please specify voltage)	**NN** None
D UNV 120-277V	**D** Advance Xitanium DALI (5% Dim) **H** Lutron EcoSystem LDE1 (<1% Dim, Fade-to-Black)			
D UNV 120-277V	**S** Advance Xitanium SR (1% Dim)	**1** Single Circuit **V** Single Circuit + 1 Thru Wire (BP Trigger)	**N** None **B** Battery Pack **R** UL924 Sensor Bypass Relay	**NN** None **CS** Interact Pro scalable wireless sensor with integral daylight & occupancy sensing, advanced grouping with dwell time **SB** Interact Pro Enterprise advanced wireless sensor bundle, integral SC1500 with IoT capabilities for enterprise scale projects
D UNV 120-277V	**F** Advance FlexTune SR (1% Dim) **2** 0-10V 2ch (1% Dim) **6** DALI DT6 2ch (1% Dim) **8** DALI DT8 2ch (1% Dim)	**1** Single Circuit **V** Single Circuit + 1 Thru Wire (BP Trigger)	**N** None	**NN** None **CS** Interact Pro scalable wireless sensor with integral daylight & occupancy sensing, advanced grouping with dwell time **SB** Interact Pro Enterprise advanced wireless sensor bundle, integral SC1500 with IoT capabilities for enterprise scale projects

Finish[17]		Mount Type	Ceiling Type		Suspension	
W Standard White **T** Titanium Silver **B** Black **G** Graphite Grey	**1** Dark Walnut Woodgrain **2** Light Cherry Woodgrain **3** White Cherry Woodgrain **C** Custom (please specify)	**A** Aircraft cable mount	**1** Non-accessible ceiling, 0°-15° Slope Mount **2** T-Grid, Fixed Position Mount **3** Non-accessible ceiling, 0°-90° Slope Mount **5** T-Grid 24" Span Mount (non tegular tile only)	**6-1** T-Grid On-Grid Mount 15/16" (non tegular tile only) **6-2** T-Grid On-Grid Mount 9/16" (non tegular tile only) **6-3** T-Grid On-Grid Mount 9/16" x 5/16" (slot tee & tegular tile)	**24** 24" **48** 48" **96** 96"	**144** 144" **192** 192" **240** 240"

Notes: Aircraft cable suspension length is from ceiling to top of luminaire. Standard power cord is white. Black or clear power cords available on request. Standard canopies are white. A1 and A3 canopies can be powder coated to match fixture color on request (*excludes woodgrain finishes). See footnotes on page 2.

Finish options

Standard White (W) | Titanium Silver (T) | Midnight Black (B) | Graphite Grey (G) | Dark Walnut (1) | Light Cherry (2) | White Cherry (3)

DLC Note: Not all product variations listed on this page are DLC qualified. To ensure that a specific model is qualified, visit **www.designlights.org/search**

Made in Canada | Declare | quickship | DLC Listed | DLC Listed Premium | ETL | mesoOptics | interact ready.

TruGroove suspended micro (lens)

Ordering guide footnotes

1. Nominal values within a range. Not all lumen packages are available with all configurations. Consult photometry data for CRI, color temp, lumens & distribution of chosen configuration.
2. Not all wiring types are available with all configurations. Consult Ledalite for a complete list of available options.
3. 347V not available with Battery Pack, GTD, DALI, Lutron EcoSystem or Sensor Ready drivers or Interact Pro options. Battery packs available in modules > 4ft (lumen package limits may apply, check with Ledalite).
4. Interact Pro options require separate controls hardware by Signify.
5. Tunable White options are available with 2ch 0–10V, DALI-2 (DT6 or DT8) or Interact Office (PoE) wired drivers. Please enquire about options such as or DMX control (extended lead times may apply).
6. Auxiliary Wiring not available with Interact Pro luminaires. Aux sections are wired to one fixture end only.
7. Flat corners are 90°. No asymmetric lens optics in corners. Please enquire about options for custom angles and intersections. for 2ft D/I configurations please consult factory. (Extended lead times may apply for these options).
8. Tunable White not available with Louver Cell Optics.
9. Integral sensors only recommended at ends of runs for best aesthetics. Mid run sensors can be provided in remote mounts. Integral sensors not available with Drop Lens options. Please enquire about options for remote sensors. Sensors must be combined with a Sensor Ready driver options. Default sensor color is white, fixtures with black finish have black sensors. (Consult factory for other combinations). Other third party sensors also available, please enquire about options for Lutron Athena, or others.
10. Luminaires are pre-wired to both ends with quick wire connectors at one end for standard circuit & battery pack trigger wire (if applicable). Each circuit has its own neutral conductor. All circuits are clearly labelled at each end.
11. Thru Wire options can provide either one additional set of (4) power and dimming wires (Black/White/Purple/Pink or Brown) or one additional battery pack trigger wire (Orange) through a selected module, please consult factory for other Thru Wire options.
12. Other options not shown here may also be possible via a custom request. Extended lead times and minimum order quantities may apply, please consult factory.
13. UL924 listed sensor bypass relay is factory installed between driver & sensor. Must be ordered in same module as integral sensing option. Consult Ledalite for other options. Must be installed in conjunction with a UL1008 device.
14. Must order IRT9015 Interact commissioning remote with each system order.
15. Combination modules with Louver Cells and a Flush Lens may be specified by using the "Louver Cell Length" and "Louver Cell Position" options.
16. Black Lens limits direct lumens to 700 or 1000lm/4ft and indirect lumens to a max of 3000lm/4ft. Tunable White only in MesoOptic, Flush Silk or Drop Silk lenses, consult photometry data for lumens options of chosen configuration.
17. Woodgrain finishes only available in straight runs.

Note: Due to continuing product improvements, Ledalite reserves the right to change the specifications without notice

TruGroove suspended micro (lens)

Options and dimensions

Standalone

Keep it simple with standalone modules, available in 8 standard lengths (consult Ledalite for custom lengths).

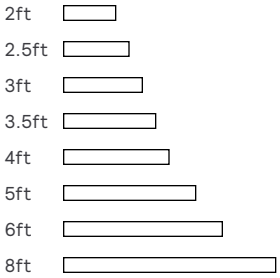

Continuous Run

Create an uninterrupted ribbon of light with continuous runs, specifiable to 6 in.

Patterns

Seamlessly create any pattern imaginable (flat corners are 90°, contact Ledalite for custom angles and intersections).

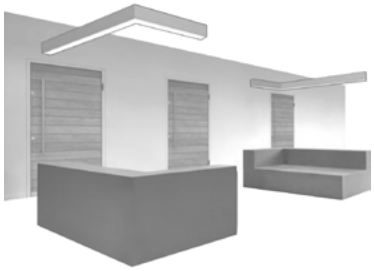

Flush lens

TruGroove suspended micro with 1.75" wide Flush MesoOptics or Silk lens.

Direct/Indirect

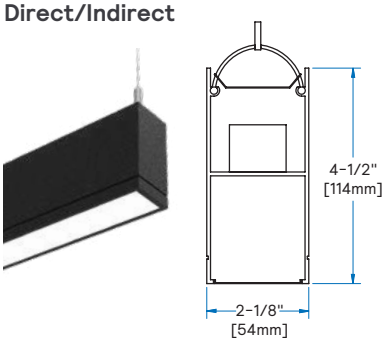

Direct

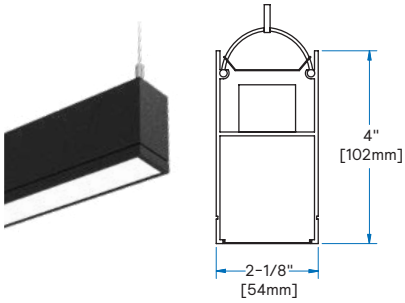

Indirect

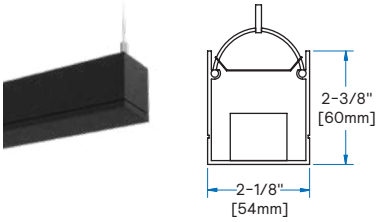

Louver

TruGroove suspended micro with Ledalite's unique quad optic louver cells with MesoOptics in 6 distributions.

Direct/Indirect

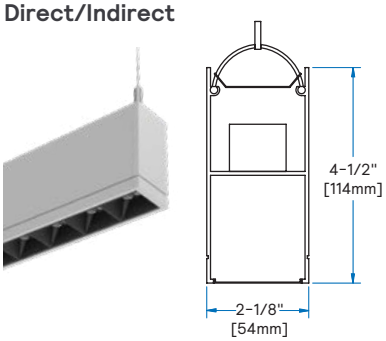

Direct

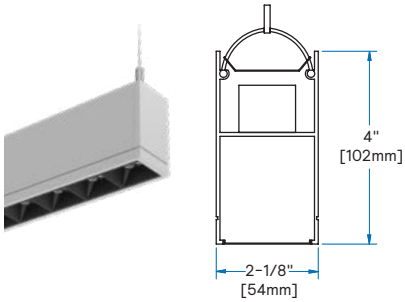

Louvers can be ordered at the full fixture length or in 6 in. or 1 ft sections at one or both ends of a fixture in combination with a lens.

Drop lens and black lens (Coming soon)

TruGroove suspended micro with drop lens and black lens options.

TruGroove suspended micro (lens)

Options and dimensions

Side Views

Standalone

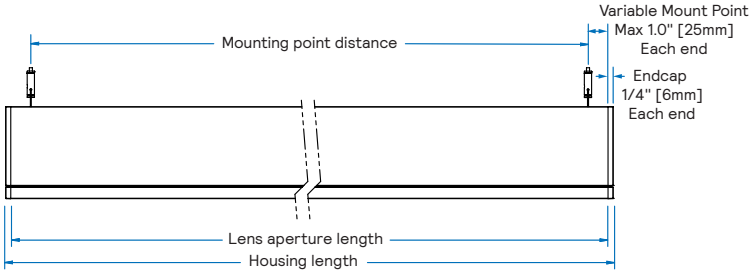

Nominal	Housing	Lens **Aperture**	Mounting **Points**
2ft	24.5" [622mm]	24.0" [610mm]	22.0" [559mm] to 23.5" [597mm]
2.5ft	30.5" [775mm]	30.0" [762mm]	28.0" [711mm] to 29.5" [749mm]
3ft	36.5" [927mm]	36.0" [914mm]	34.0" [864mm] to 35.5" [902mm]
3.5ft	42.5" [1080mm]	42.0" [1067mm]	40.0" [1016mm] to 41.5" [1054mm]
4ft	48.5" [1232mm]	48.0" [1219mm]	46.0" [1168mm] to 47.5" [1207mm]
5ft	60.5" [1537mm]	60.0" [1524mm]	58.0" [1473mm] to 59.5" [1511mm]
6ft	72.5" [1842mm]	72.0" [1829mm]	70.0" [1718mm] to 71.5" [1816mm]
8ft	69.5" [2451mm]	96.0" [2438mm]	94.0" [2388mm] to 95.5" [2426mm]

Continuous Run (Mid-run)

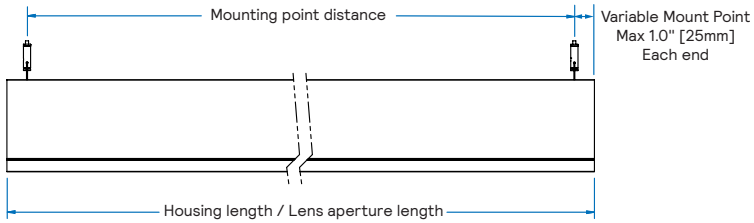

Nominal	Housing	Lens **Aperture**	Mounting **Points**
2ft	24.0" [610mm]	24.0" [610mm]	22.0" [559mm] to 23.5" [597mm]
2.5ft	30.0" [762mm]	30.0" [762mm]	28.0" [711mm] to 29.5" [749mm]
3ft	36.0" [914mm]	36.0" [914mm]	34.0" [864mm] to 35.5" [902mm]
3.5ft	42.0" [1067mm]	42.0" [1067mm]	40.0" [1016mm] to 41.5" [1054mm]
4ft	48.0" [1219mm]	48.0" [1219mm]	46.0" [1168mm] to 47.5" [1207mm]
5ft	60.0" [1524mm]	60.0" [1524mm]	58.0" [1473mm] to 59.5" [1511mm]
6ft	72.0" [1829mm]	72.0" [1829mm]	70.0" [1718mm] to 71.5" [1816mm]
8ft	96.0" [2438mm]	96.0" [2438mm]	94.0" [2388mm] to 95.5" [2426mm]

Continuous Run (End-run)

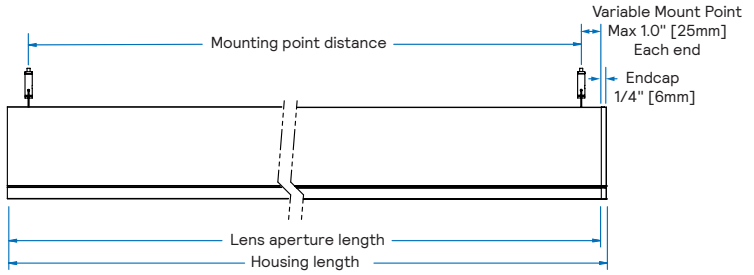

Nominal	Housing	Lens **Aperture**	Mounting **Points**
2ft	24.25" [616mm]	24.0" [610mm]	22.0" [559mm] to 23.5" [597mm]
2.5ft	30.25" [768mm]	30.0" [762mm]	28.0" [711mm] to 29.5" [749mm]
3ft	36.25" [921mm]	36.0" [914mm]	34.0" [864mm] to 35.5" [902mm]
3.5ft	42.25" [1073mm]	42.0" [1067mm]	40.0" [1016mm] to 41.5" [1054mm]
4ft	48.25" [1226mm]	48.0" [1219mm]	46.0" [1168mm] to 47.5" [1207mm]
5ft	60.25" [1530mm]	60.0" [1524mm]	58.0" [1473mm] to 59.5" [1511mm]
6ft	72.25" [1842mm]	72.0" [1829mm]	70.0" [1718mm] to 71.5" [1816mm]
8ft	96.25" [2445mm]	96.0" [2438mm]	94.0" [2388mm] to 95.5" [2426mm]

Top View

Flat Corner 90°

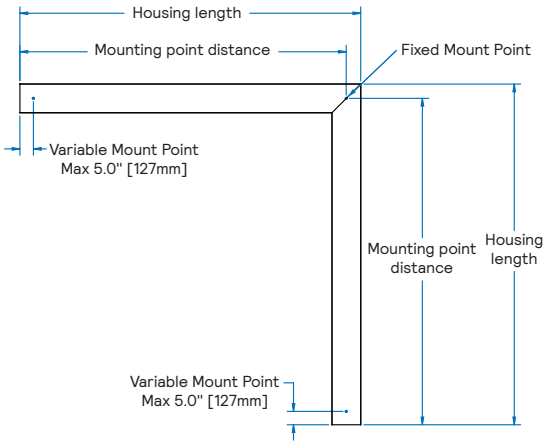

Nominal	Housing	Mounting **Points**
2ft x 2ft	25.1" [636mm]	23.0" [585mm]

Flat corners are 2ft x 2ft and can be used to create suspended patterns.
Flat corners are 90°, contact Ledalite for custom angles and intersections.

TruGroove suspended micro (lens)

Specifications

Optical System

Direct hemisphere: Light emitted from a linear array of downward-facing LEDs is laterally redirected using optical microstructures embedded in a layer of MesoOptics DX film to generate an optimal batwing distribution and a uniform continuum of light. The available Flush Silk lens is a value-oriented option that provides a lambertian distribution while maintaining a uniform continuum of light.

Additionally, Ledalite's unique Quad Optic Louver Cell provides 6 tailored optical distributions with reduced glare.

Indirect hemisphere: White light emitted from a linear array of upward-facing LEDs is shaped into a homogeneous, wide-throw batwing distribution or a low peak angle asymmetric throw using either a free-form elliptical lens or an engineered light guide panel.

Housing

Post painted precision aluminum extrusion.

Endcaps

Diecast flat aluminum endcaps with integral groove to match housing.

Finish

High quality powder coated, available in standard Matte White, Black, Titanium Silver or Graphite Grey. TruGroove can also be specified in any custom color upon request for a one-time setup charge. Optional sensors (such as Interact Pro) available in white only.

Mounting

Suspended: Variable sling mount allows ± 5" of horizontal adjustment from joint or end. Aircraft cable and tamper-resistant gripper provide unlimited vertical adjustment and are independently tested to stringent safety standards.

Joints

Self-aligning joining system with hands-free pre-joining wire access.

Weight

Maximum 3.8/ft (suspended), 10lb (2ft x 2ft suspended corner).

Electrical

Fixtures are factory pre-wired to section ends with quick-wire connectors and tested for all circuits and backup battery packs. LED boards and drivers are easily field replaceable with access from below the ceiling.

Standard Drivers

Advance Xitanium 0-10V, 1% Dimming.
Advance Xitanium DALI, 5% Dimming.
Advance Xitanium Sensor Ready, 1% Dimming.
Lutron EcoSystem LDE1, 1% Dimming with Soft-On and Fade-to-Black.
Class 2 rated output. Consult Ledalite for other available drivers.

Standard Battery Packs

Bodine Battery Pack, 90 min, 10W, Class 2 rated output.
Lumen output = 10W x luminaire efficacy x 1.1. Typical output ~1200lm.

Lumen Maintenance

LEDs have been tested by the manufacturer in accordance with IESNA LM-80-15. At an ambient temperature of 25°C, the LED lumen maintenance expectation according to IES TM-21-11 is:
L_{80} (10k) > 60,000 hours (Reported methodology).

Source Color

LEDs rated for color rendering of:
CRI $R_a \geq 90$, $R_9 \geq 50$, $G_a \geq 97$, $C_9 \geq 90$
IES TM-30-18 : $R_f \geq 90$, $R_{f,h1} \geq 89$, $R_g \geq 99$, $R_{cs,h1} \geq -5\%$

SPD and TM-30-18 reports available upon request

Fixture to fixture color accuracy within:
2 SDCM for Static White luminaires
3 SDCM for Tunable White luminaires

Approvals

Certified to UL, IES & CSA Standards.

Certain versions without battery packs are DesignLights Consortium qualifies. Please see the DLC QPL list for exact catalog numbers. www.designlights.org/QPL

Select TruGroove micro configurations contribute toward satisfying features L03, L04, L06, L07 and L08 under the WELL v2 Building Standard®.

TruGroove is Declare label certified. More information on the TruGroove label can be found on https://declare.living-future.org/ and through the Declare ID **SGY-0007**.

Environment

Rated for dry or damp locations in operating ambient temperatures of 0-25°C (32-77°F).

Many luminaire components, such as reflectors, refractors, lenses, and LEDs are made from various types of plastics which can be adversely affected by airborne contaminants. If sulfur-based chemicals, petroleum-based products, cleaning solutions, or other contaminants are expected in the intended area of use, consult factory for compatibility. Damage caused by sulfur, chlorine, petroleum-based solution or other contaminants are not covered under warranty. Not suitable for natatorium environments.

Warranty

Five-year luminaire limited warranty including LED boards and driver: www.signify.com/warranties

QuickShip

10-day QuickShip available for most configurations upon request. More information available at: www.signify.com/en-us/brands/ledalite/quickship

TruGroove suspended micro (lens)

Wireless Controls Options

Interact Pro scalable sensor for Foundation, Advanced & Enterprise tiers (CS an evolution of SpaceWise):

- CS is a connected sensor with integral occupancy and daylight sensing and supports wireless mesh connectivity.
- The sensor works in the Foundation mode (similar to SpaceWise) when configured without a gateway or in an Interact Pro Advanced or Enterprise mode if a compatible gateway is used.
- Interact Pro includes an App, a portal and a broad portfolio of wireless luminaires, lamps and retrofit kits all working on the same system.
- Startup is implemented via Interact Pro App (Android or iPhone) & Bluetooth connectivity. The App provides flexibility to choose between a gateway or non gateway mode for setup.
- Setup with the gateway requires wired internet access to the gateway. It is possible to add a gateway at a later point.
- Prepare project configuration steps remotely and use IRT9015 remote onsite to identify and group devices together.
- Compatible with UID8451/10 wireless dimmer switch, SWS200 wireless scene switch, wireless Occ sensor (OCC SENSOR IA CM IP42 WH 10/1) and wireless Day/Occ sensor (OCC MULTI SENSOR IA CM WH 10/1).
- For more information on Interact Pro visit: www.interact-lighting.com/interactproscalablesystem

Emergency Options (R):

- Power Sensing (Factory default) – Recommended
- UL924 option requires unswitched power sense line, absence of voltage on the normal circuit triggers luminaire to 100% output.
- Power Interruption Detection (Field option)
- Detects AC power interruption >30ms triggers 90 minute emergency mode with luminaire at 100% output.

Interact Pro scalable sensor bundles for Enterprise tier (SB):

- SB option, in addition to occupancy and daylight sensing, supports advanced IoT capabilities such as people estimation analysis, desk level temperature & humidity sensing, noise classification, and BLE beacon.
- Compatible with UID8451/10 wireless dimmer switch, SWS200 wireless scene switch, wireless Occ sensor (OCC SENSOR IA CM IP42 WH 10/1) and wireless Day/Occ sensor (OCC MULTI SENSOR IA CM WH 10/1).
- Use Interact software and insights to increase building efficiency, achieve building wide integration and optimize space through occupancy analytics.
- Requires compatible Gateway and internet connectivity for commissioning. For more information, visit: www.interact-lighting.com/office

Wired Controls Options

Tunable White:

- Tunable White is available in control options for Tunable White with DALI (DT6 or DT8), 0-10V, or DMX control are available via an Engineered-to-Order (ETO) request.
- Signify tunable white solutions are designed to help maximize the influence of lighting on your daily life.
- Dynamic behaviors via scheduled lighting recipes mimicking daylight patterns or supporting biorhythms.
- Scene setting via lighting pre-sets based on various combinations of lighting color temperature and intensity.

Interact Pro scalable sensor option codes across Genlyte product lines

	Evokit	Day-Brite	Ledalite	Lightolier
ZeeBee + Bluetooth + Sensing	SWZCS	SWZCS	CS	SBA accessory (external)
ZeeBee + Bluetooth	RADIO	RADIO	RA	RA
ZeeBee + Bluetooth + Sensing + Environmental data	IAOSB	IAOSB	SB	SB
ZeeBee + Highbay + Sensing	-	SWZCSH	-	-

TruGroove suspended micro (lens)

Functionalities overview

	The three tiers of Interact		
	Standalone	Gateway	Gateway + IoT
Dimming, grouping, and zoning	✓	✓	✓
Bluetooth and ZigBee enabled	✓	✓	✓
Motion sensing and daylight harvesting	✓	✓	✓
Integration with 0-10V and phase dimming fixtures	✓	✓	✓
Code compliance	✓	✓	✓
Granular dimming and dwell time	✓	✓	✓
New Correlated color temperature (CCT) tuning by switch	✓	✓	✓
New Support for sensor-based Tunable White luminaires	✓	✓	✓
Energy reporting and monitoring		✓	✓
Scheduling		✓	✓
Demand response		✓	✓
BMS integration (BACnet)			✓
Floor plan visualization			✓
IoT sensors for wellness			✓
IoT Apps for productivity			✓

Currently supported maximum system size

To be able to design the lighting system correctly for the customer, it is important to know the prime characteristics of the system, its possibilities and limitations.

System level	
Total number of gateways	Unlimited
Total number of devices	200 per network
• luminaires with integrated sensors	150
• smart TLEDS	150
Total number of ZGP devices (sensors and switches)	50
• sensors	30
• switches	50
• zones and groups	64
Group level	
Recommended number of lights	40 (recommended 25)
Number of ZGP devices	5
Number of scenes	16

Interact system architecture for office, education, healthcare, retail, industrial and parking applications

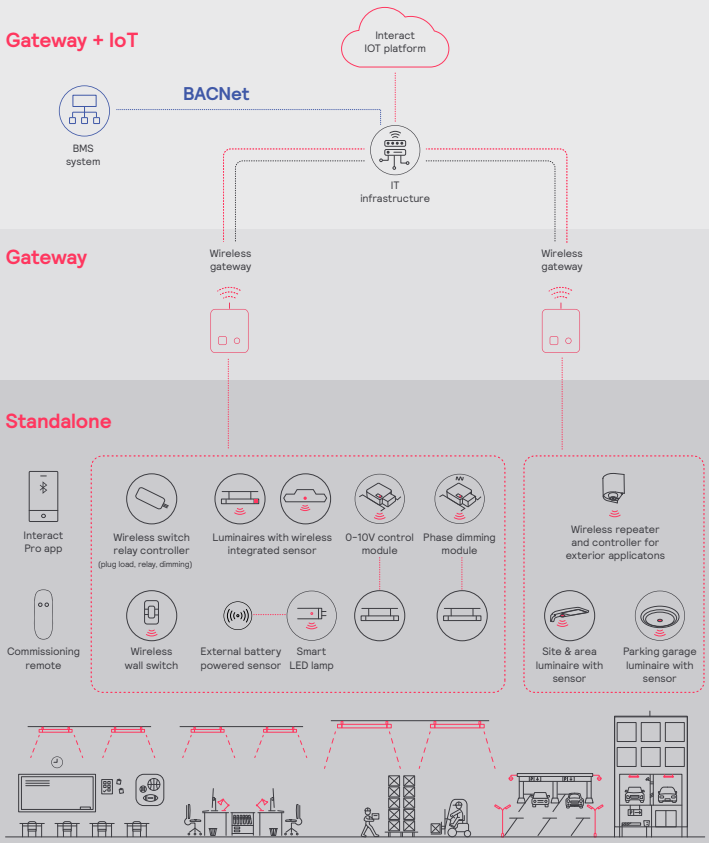

TruGroove suspended micro (lens)

Colorimetry

TruGroove micro (TMxx) AccuRender Static White

Nominal CRI &CCT		CRI 90, 2700K	CRI 90, 3000K	CRI 90, 3500K	CRI 90, 4000K	CRI 90, 5000K
CIE 013.3-1995 [1]	CRI R_a	94	93	93	93	93
	R_9	55	57	59	64	68
	G_a	99	99	99	99	99
	C_9	93	93	93	93	94
IES TM-30-18 [2]	R_f	92	91	91	91	90
	R_f, h_1	90	90	90	91	89
	R_g	100	100	99	100	100
	R_{cs}, h_1	-6%	-5%	-6%	-5%	-5%
MDER [3]		0.45	0.51	0.58	0.65	0.81

1. Color Rendering Index (CRI Ra) and Strong Red (R9) are calculated in accordance with CIE 013.3-1995. Color Gamut index (Ga) and red chroma Index (C9) are CIE based properties using the Global Lighting Association's calculation tool.
2. Fidelity Index (Rf), Red Fidelity Index (Rf,h1), Gamut Index (Rg), and Red Local Chroma Shift (Rcs,h1) are calculated in accordance with IES TM-30-18.
3. Melanopic Daylight Efficacy Ratio (MDER) is the measure for "spectral melanopic efficiency" as defined in CIE S 026-2018.

Photometry

The following pages contain photometry for TruGroove suspended micro with lens.

Photometry for TruGroove suspended micro with lens can be found by scanning the QR code or following the link: https://share.lighting.com/:i:/r/teams/LedaliteProductManagementIntern/Shared%20Documents/Ledalite%20Spec%20Sheet%20Updates/TruGroove_micro_lens/frame%20(2).png?csf=1&web=1&e=y8midy

TruGroove suspended micro (lens)

Photometry

Direct (TM01) Performance Symmetric Batwing Flush MesoOptic lens

Nominal CRI &CCT			CRI 90, 2700K					CRI 90, 3000K					CRI 90, 3500K					CRI 90, 4000K					CRI 90, 5000K				
Nominal Lumen Package (lm/4ft)		Watts	Flux (lm/4ft) [1]	Efficacy (LPW) [1]	UGR [5]	Photometry Report	IES File	Flux (lm/4ft) [1]	Efficacy (LPW) [1]	UGR [5]	Photometry Report	IES File	Flux (lm/4ft) [1]	Efficacy (LPW) [1]	UGR [5]	Photometry Report	IES File	Flux (lm/4ft) [1]	Efficacy (LPW) [1]	UGR [5]	Photometry Report	IES File	Flux (lm/4ft) [1]	Efficacy (LPW) [1]	UGR [5]	Photometry Report	IES File
Direct	Indirect																										
4000	NA	43.1	3,759	87.2	25.5	PDF	IES	3,856	89.5	25.6	PDF	IES	3,995	92.7	25.7	PDF	IES	4,038	93.7	25.7	PDF	IES	4,085	94.8	25.8	PDF	IES
3500	NA	37.3	3,294	88.3	25.0	PDF	IES	3,372	90.4	25.1	PDF	IES	3,498	93.8	25.3	PDF	IES	3,537	94.8	25.3	PDF	IES	3,575	95.8	25.3	PDF	IES
3000	NA	31.6	2,832	89.6	24.5	PDF	IES	2,894	91.6	24.6	PDF	IES	3,006	95.1	24.7	PDF	IES	3,039	96.2	24.8	PDF	IES	3,070	97.2	24.8	PDF	IES
2500	NA	26.4	2,358	89.3	23.9	PDF	IES	2,407	91.2	24.0	PDF	IES	2,503	94.8	24.1	PDF	IES	2,530	95.8	24.1	PDF	IES	2,555	96.8	24.2	PDF	IES
2000	NA	20.7	1,892	91.4	23.1	PDF	IES	1,930	93.2	23.2	PDF	IES	2,008	97.0	23.3	PDF	IES	2,029	98.0	23.4	PDF	IES	2,048	98.9	23.4	PDF	IES
1500	NA	15.9	1,416	89.1	22.1	PDF	IES	1,445	90.9	22.2	PDF	IES	1,505	94.7	22.3	PDF	IES	1,518	95.5	22.4	PDF	IES	1,533	96.4	22.4	PDF	IES
1000	NA	11.2	933	83.3	20.7	PDF	IES	952	85.0	20.7	PDF	IES	993	88.7	20.9	PDF	IES	999	89.2	20.9	PDF	IES	1,010	90.2	20.9	PDF	IES

Direct (TM01) Performance Asymmetric Wall Wash Flush MesoOptic lens

Nominal CRI &CCT			CRI 90, 2700K					CRI 90, 3000K					CRI 90, 3500K					CRI 90, 4000K					CRI 90, 5000K				
Nominal Lumen Package (lm/4ft)		Watts	Flux (lm/4ft) [1]	Efficacy (LPW) [1]	UGR [5]	Photometry Report	IES File	Flux (lm/4ft) [1]	Efficacy (LPW) [1]	UGR [5]	Photometry Report	IES File	Flux (lm/4ft) [1]	Efficacy (LPW) [1]	UGR [5]	Photometry Report	IES File	Flux (lm/4ft) [1]	Efficacy (LPW) [1]	UGR [5]	Photometry Report	IES File	Flux (lm/4ft) [1]	Efficacy (LPW) [1]	UGR [5]	Photometry Report	IES File
Direct	Indirect																										
4000	NA	43.1	3,641	84.5	24.9	PDF	IES	3,735	86.7	25.0	PDF	IES	3,870	89.8	25.1	PDF	IES	3,911	90.7	25.1	PDF	IES	3,957	91.8	25.2	PDF	IES
3500	NA	37.3	3,190	85.5	24.4	PDF	IES	3,266	87.6	24.5	PDF	IES	3,388	90.8	24.6	PDF	IES	3,426	91.8	24.7	PDF	IES	3,463	92.8	24.7	PDF	IES
3000	NA	31.6	2,743	86.8	23.9	PDF	IES	2,803	88.7	24.0	PDF	IES	2,912	92.2	24.1	PDF	IES	2,944	93.2	24.2	PDF	IES	2,974	94.1	24.2	PDF	IES
2500	NA	26.4	2,284	86.5	23.3	PDF	IES	2,332	88.3	23.3	PDF	IES	2,425	91.9	23.5	PDF	IES	2,451	92.8	23.5	PDF	IES	2,475	93.8	23.6	PDF	IES
2000	NA	20.7	1,832	88.5	22.5	PDF	IES	1,869	90.3	22.6	PDF	IES	1,945	94.0	22.7	PDF	IES	1,965	94.9	22.7	PDF	IES	1,984	95.8	22.8	PDF	IES
1500	NA	15.9	1,371	86.2	21.5	PDF	IES	1,399	88.0	21.6	PDF	IES	1,458	91.7	21.7	PDF	IES	1,470	92.5	21.7	PDF	IES	1,485	93.4	21.8	PDF	IES
1000	NA	11.2	904	80.7	20.0	PDF	IES	922	82.3	20.1	PDF	IES	962	85.9	20.3	PDF	IES	968	86.4	20.3	PDF	IES	979	87.4	20.3	PDF	IES

Direct (TM01) Definition Symmetric Flush Silk lens

Nominal CRI &CCT			CRI 90, 2700K					CRI 90, 3000K					CRI 90, 3500K					CRI 90, 4000K					CRI 90, 5000K				
Nominal Lumen Package (lm/4ft)		Watts	Flux (lm/4ft) [1]	Efficacy (LPW) [1]	UGR [5]	Photometry Report	IES File	Flux (lm/4ft) [1]	Efficacy (LPW) [1]	UGR [5]	Photometry Report	IES File	Flux (lm/4ft) [1]	Efficacy (LPW) [1]	UGR [5]	Photometry Report	IES File	Flux (lm/4ft) [1]	Efficacy (LPW) [1]	UGR [5]	Photometry Report	IES File	Flux (lm/4ft) [1]	Efficacy (LPW) [1]	UGR [5]	Photometry Report	IES File
Direct	Indirect																										
4000	NA	43.1	3,955	91.8	27.2	PDF	IES	4,058	94.2	27.3	PDF	IES	4,204	97.5	27.4	PDF	IES	4,249	98.6	27.4	PDF	IES	4,299	99.7	27.5	PDF	IES
3500	NA	37.3	3,466	92.9	26.7	PDF	IES	3,548	95.1	26.8	PDF	IES	3,681	98.7	26.9	PDF	IES	3,721	99.8	27.0	PDF	IES	3,762	100.9	27.0	PDF	IES
3000	NA	31.6	2,980	94.3	26.2	PDF	IES	3,045	96.4	26.3	PDF	IES	3,163	100.1	26.4	PDF	IES	3,198	101.2	26.4	PDF	IES	3,231	102.2	26.5	PDF	IES
2500	NA	26.4	2,482	94.0	25.6	PDF	IES	2,533	95.9	25.6	PDF	IES	2,634	99.8	25.8	PDF	IES	2,662	100.8	25.8	PDF	IES	2,688	101.8	25.8	PDF	IES
2000	NA	20.7	1,990	96.1	24.8	PDF	IES	2,031	98.1	24.9	PDF	IES	2,113	102.1	25.0	PDF	IES	2,135	103.1	25.0	PDF	IES	2,155	104.1	25.1	PDF	IES
1500	NA	15.9	1,490	93.7	23.8	PDF	IES	1,520	95.6	23.9	PDF	IES	1,583	99.6	24.0	PDF	IES	1,597	100.4	24.0	PDF	IES	1,613	101.4	24.1	PDF	IES
1000	NA	11.2	982	87.7	22.3	PDF	IES	1,002	89.5	22.4	PDF	IES	1,045	93.3	22.5	PDF	IES	1,052	93.9	22.6	PDF	IES	1,063	94.9	22.6	PDF	IES

1. 4ft Luminaire photometry has been conducted in accordance with IES LM-79-08. IES files can be downloaded by clicking the links in the table above, or online at ledalite.com. Luminaires with finishes other than standard white may result in a drop in flux and efficacy.
2. Unified Glare Ratio (UGR) is calculated in accordance with CIE 117-1995. Reference conditions of 4Hx8Hx1H and reflectances of 70/50/20% have been applied using the procedure described in CIE 190-2010.

Performance Symmetric Batwing Flush MesoOptic lens
Spacing Criteria: 1.17/1.48

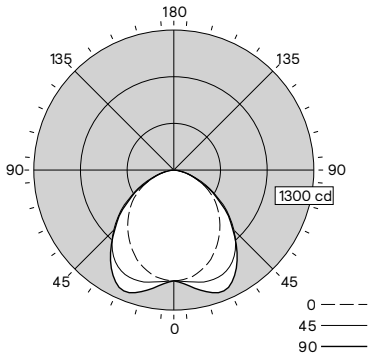

100% Down / 0% Up

Performance Asymmetric Wall Wash Flush MesoOptic lens
Spacing Criteria: 1.44/1.23

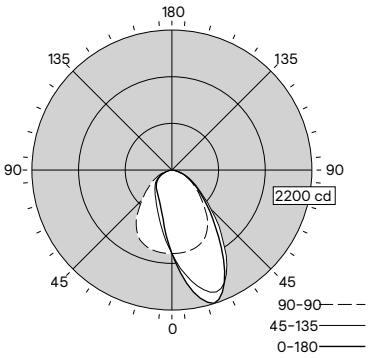

100% Down / 0% Up

Definition Symmetric Flush Silk lens
Spacing Criteria: 1.23/1.22

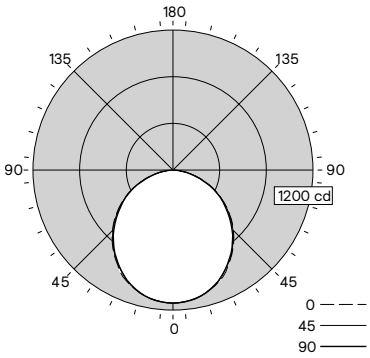

100% Down / 0% Up

Candela plots shown are for 3000lm/4ft, CRI 90, 3500K configurations.

TruGroove suspended micro (lens)

Photometry

Indirect (TM03) Performance Symmetric lens

Nominal CRI &CCT			CRI 90, 2700K					CRI 90, 3000K					CRI 90, 3500K					CRI 90, 4000K					CRI 90, 5000K				
Nominal Lumen Package (lm/4ft)		Watts	Flux (lm/4ft) [1]	Efficacy (LPW) [1]	UGR [5]	Photometry Report	IES File	Flux (lm/4ft) [1]	Efficacy (LPW) [1]	UGR [5]	Photometry Report	IES File	Flux (lm/4ft) [1]	Efficacy (LPW) [1]	UGR [5]	Photometry Report	IES File	Flux (lm/4ft) [1]	Efficacy (LPW) [1]	UGR [5]	Photometry Report	IES File	Flux (lm/4ft) [1]	Efficacy (LPW) [1]	UGR [5]	Photometry Report	IES File
Direct	Indirect																										
NA	7000	55.6	6,532	117.5	N/A	PDF	IES	6,717	120.8	N/A	PDF	IES	7,004	126.0	N/A	PDF	IES	7,089	127.5	N/A	PDF	IES	7,244	130.3	N/A	PDF	IES
NA	6000	45.8	5,606	122.4	N/A	PDF	IES	5,766	125.9	N/A	PDF	IES	5,997	130.9	N/A	PDF	IES	6,079	132.7	N/A	PDF	IES	6,213	135.7	N/A	PDF	IES
NA	5000	37.6	4,693	124.8	N/A	PDF	IES	4,825	128.3	N/A	PDF	IES	5,005	133.1	N/A	PDF	IES	5,079	135.1	N/A	PDF	IES	5,195	138.2	N/A	PDF	IES
NA	4000	29.4	3,754	127.7	N/A	PDF	IES	3,860	131.3	N/A	PDF	IES	3,992	135.8	N/A	PDF	IES	4,057	138.0	N/A	PDF	IES	4,150	141.2	N/A	PDF	IES
NA	3000	22.2	2,817	126.9	N/A	PDF	IES	2,899	130.6	N/A	PDF	IES	2,992	134.8	N/A	PDF	IES	3,043	137.1	N/A	PDF	IES	3,110	140.1	N/A	PDF	IES
NA	2000	14.7	1,895	128.9	N/A	PDF	IES	1,954	132.9	N/A	PDF	IES	2,011	136.8	N/A	PDF	IES	2,049	139.4	N/A	PDF	IES	2,089	142.1	N/A	PDF	IES
NA	1000	8.5	950	111.8	N/A	PDF	IES	981	115.4	N/A	PDF	IES	1,005	118.2	N/A	PDF	IES	1,029	121.1	N/A	PDF	IES	1,045	122.9	N/A	PDF	IES

Indirect (TM03) Performance Asymmetric lens

Nominal CRI &CCT			CRI 90, 2700K					CRI 90, 3000K					CRI 90, 3500K					CRI 90, 4000K					CRI 90, 5000K				
Nominal Lumen Package (lm/4ft)		Watts	Flux (lm/4ft) [1]	Efficacy (LPW) [1]	UGR [5]	Photometry Report	IES File	Flux (lm/4ft) [1]	Efficacy (LPW) [1]	UGR [5]	Photometry Report	IES File	Flux (lm/4ft) [1]	Efficacy (LPW) [1]	UGR [5]	Photometry Report	IES File	Flux (lm/4ft) [1]	Efficacy (LPW) [1]	UGR [5]	Photometry Report	IES File	Flux (lm/4ft) [1]	Efficacy (LPW) [1]	UGR [5]	Photometry Report	IES File
Direct	Indirect																										
NA	6000	57.3	5,602	97.8	N/A	PDF	IES	5,759	100.5	N/A	PDF	IES	6,008	104.9	N/A	PDF	IES	6,079	106.1	N/A	PDF	IES	6,212	108.4	N/A	PDF	IES
NA	5000	45.6	4,681	102.7	N/A	PDF	IES	4,815	105.6	N/A	PDF	IES	5,007	109.8	N/A	PDF	IES	5,075	111.3	N/A	PDF	IES	5,187	113.8	N/A	PDF	IES
NA	4000	35.7	3,753	105.1	N/A	PDF	IES	3,859	108.1	N/A	PDF	IES	4,000	112.0	N/A	PDF	IES	4,060	113.7	N/A	PDF	IES	4,153	116.3	N/A	PDF	IES
NA	3000	26.4	2,824	107.0	N/A	PDF	IES	2,904	110.0	N/A	PDF	IES	3,001	113.7	N/A	PDF	IES	3,051	115.6	N/A	PDF	IES	3,120	118.2	N/A	PDF	IES
NA	2000	17.3	1,888	109.1	N/A	PDF	IES	1,945	112.4	N/A	PDF	IES	2,004	115.8	N/A	PDF	IES	2,040	117.9	N/A	PDF	IES	2,082	120.3	N/A	PDF	IES
NA	1000	9.5	939	98.8	N/A	PDF	IES	970	102.1	N/A	PDF	IES	995	104.7	N/A	PDF	IES	1,017	107.1	N/A	PDF	IES	1,033	108.7	N/A	PDF	IES

1. 4ft Luminaire photometry has been conducted in accordance with IES LM-79-08. IES files can be downloaded by clicking the links in the table above, or online at ledalite.com. Luminaires with finishes other than standard white may result in a drop in flux and efficacy.
2. Unified Glare Ratio (UGR) is calculated in accordance with CIE 117-1995. Reference conditions of 4Hx8Hx1H and reflectances of 70/50/20% have been applied using the procedure described in CIE 190-2010.

Performance Symmetric lens

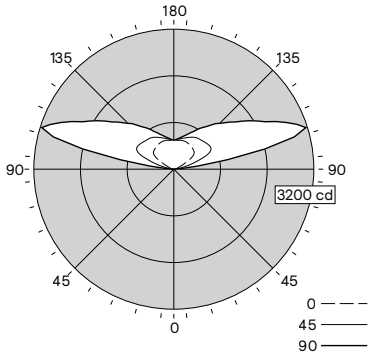

0% Down / 100% Up

Performance Asymmetric lens

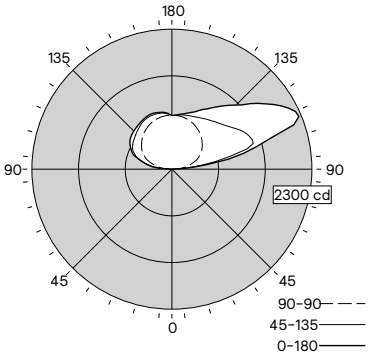

0% Down / 100% Up

Candela plots shown are for 5000lm/4ft, CRI 90, 3500K configurations.

TruGroove suspended micro (lens)

Photometry

Direct/Indirect (TM05 & TM06) Performance Symmetric Batwing Flush MesoOptic lens

Nominal CRI &CCT			CRI 90, 2700K					CRI 90, 3000K					CRI 90, 3500K					CRI 90, 4000K					CRI 90, 5000K				
Nominal Lumen Package (lm/4ft)		Watts	Flux (lm/4ft) [1]	Efficacy (LPW) [1]	UGR [5]	Photometry Report	IES File	Flux (lm/4ft) [1]	Efficacy (LPW) [1]	UGR [5]	Photometry Report	IES File	Flux (lm/4ft) [1]	Efficacy (LPW) [1]	UGR [5]	Photometry Report	IES File	Flux (lm/4ft) [1]	Efficacy (LPW) [1]	UGR [5]	Photometry Report	IES File	Flux (lm/4ft) [1]	Efficacy (LPW) [1]	UGR [5]	Photometry Report	IES File
Direct	Indirect																										
4000	7000	98.7	10,291	104.3	20.0	PDF	IES	10,573	107.1	20.1	PDF	IES	10,999	111.4	20.1	PDF	IES	11,127	112.7	20.2	PDF	IES	11,328	114.8	20.2	PDF	IES
	6000	88.9	9,365	105.3	20.4	PDF	IES	9,623	108.2	20.5	PDF	IES	9,992	112.4	20.6	PDF	IES	10,117	113.8	20.6	PDF	IES	10,298	115.8	20.7	PDF	IES
	5000	80.8	8,452	104.6	20.8	PDF	IES	8,681	107.4	20.9	PDF	IES	9,000	111.4	21.0	PDF	IES	9,118	112.8	21.1	PDF	IES	9,280	114.9	21.1	PDF	IES
	4000	72.4	7,513	103.8	21.4	PDF	IES	7,716	106.6	21.5	PDF	IES	7,987	110.3	21.6	PDF	IES	8,095	111.8	21.7	PDF	IES	8,235	113.7	21.7	PDF	IES
	3000	65.0	6,576	101.2	22.0	PDF	IES	6,755	103.9	22.1	PDF	IES	6,987	107.5	22.3	PDF	IES	7,081	108.9	22.3	PDF	IES	7,195	110.7	22.4	PDF	IES
	2000	57.6	5,653	98.1	22.9	PDF	IES	5,810	100.9	22.9	PDF	IES	6,006	104.3	23.1	PDF	IES	6,087	105.7	23.1	PDF	IES	6,174	107.2	23.1	PDF	IES
	1000	51.2	4,709	92.0	24.0	PDF	IES	4,837	94.5	24.1	PDF	IES	5,000	97.7	24.2	PDF	IES	5,067	99.0	24.2	PDF	IES	5,130	100.2	24.2	PDF	IES
3500	7000	92.9	9,826	105.8	19.1	PDF	IES	10,089	108.6	19.2	PDF	IES	10,502	113.0	19.4	PDF	IES	10,625	114.4	19.4	PDF	IES	10,818	116.4	19.4	PDF	IES
	6000	83.1	8,900	107.1	19.6	PDF	IES	9,138	110.0	19.7	PDF	IES	9,495	114.3	19.8	PDF	IES	9,615	115.7	19.8	PDF	IES	9,788	117.8	19.8	PDF	IES
	5000	74.9	7,987	106.6	20.1	PDF	IES	8,197	109.4	20.1	PDF	IES	8,502	113.5	20.2	PDF	IES	8,616	115.0	20.3	PDF	IES	8,770	117.1	20.3	PDF	IES
	4000	66.6	7,048	105.8	20.7	PDF	IES	7,232	108.6	20.7	PDF	IES	7,490	112.5	20.9	PDF	IES	7,593	114.0	20.8	PDF	IES	7,725	116.0	20.9	PDF	IES
	3000	59.2	6,111	103.2	21.4	PDF	IES	6,271	105.9	21.4	PDF	IES	6,489	109.6	21.6	PDF	IES	6,580	111.1	21.5	PDF	IES	6,685	112.9	21.6	PDF	IES
	2000	51.7	5,188	100.3	22.1	PDF	IES	5,326	103.0	22.2	PDF	IES	5,508	106.5	22.4	PDF	IES	5,585	108.0	22.4	PDF	IES	5,663	109.5	22.4	PDF	IES
	1000	45.4	4,244	93.5	23.3	PDF	IES	4,353	95.9	23.4	PDF	IES	4,503	99.2	23.5	PDF	IES	4,565	100.6	23.6	PDF	IES	4,619	101.7	23.6	PDF	IES
3000	7000	87.2	9,364	107.4	18.2	PDF	IES	9,611	110.2	18.3	PDF	IES	10,010	114.8	18.4	PDF	IES	10,128	116.1	18.4	PDF	IES	10,314	118.3	18.4	PDF	IES
	6000	77.4	8,438	109.0	18.6	PDF	IES	8,661	111.9	18.7	PDF	IES	9,003	116.3	18.8	PDF	IES	9,118	117.8	18.9	PDF	IES	9,283	119.9	18.8	PDF	IES
	5000	69.3	7,525	108.6	19.1	PDF	IES	7,719	111.4	19.2	PDF	IES	8,011	115.6	19.3	PDF	IES	8,119	117.2	19.4	PDF	IES	8,265	119.3	19.3	PDF	IES
	4000	61.0	6,586	108.0	19.8	PDF	IES	6,754	110.7	19.8	PDF	IES	6,998	114.7	20.0	PDF	IES	7,096	116.3	20.0	PDF	IES	7,220	118.4	20.0	PDF	IES
	3000	53.8	5,649	105.0	20.4	PDF	IES	5,793	107.7	20.5	PDF	IES	5,997	111.5	20.6	PDF	IES	6,083	113.1	20.7	PDF	IES	6,180	114.9	20.7	PDF	IES
	2000	46.3	4,727	102.1	21.3	PDF	IES	4,848	104.7	21.4	PDF	IES	5,017	108.4	21.5	PDF	IES	5,088	109.9	21.6	PDF	IES	5,159	111.4	21.6	PDF	IES
	1000	40.1	3,782	94.3	22.6	PDF	IES	3,875	96.6	22.7	PDF	IES	4,011	100.0	22.8	PDF	IES	4,068	101.4	22.9	PDF	IES	4,115	102.6	22.8	PDF	IES
2500	7000	81.8	8,891	108.7	17.0	PDF	IES	9,124	111.5	17.1	PDF	IES	9,507	116.2	17.2	PDF	IES	9,619	117.6	17.3	PDF	IES	9,799	119.8	17.2	PDF	IES
	6000	72.0	7,964	110.6	17.5	PDF	IES	8,174	113.5	17.5	PDF	IES	8,500	118.1	17.6	PDF	IES	8,609	119.6	17.7	PDF	IES	8,768	121.8	17.6	PDF	IES
	5000	63.9	7,051	110.3	18.0	PDF	IES	7,233	113.2	18.1	PDF	IES	7,508	117.5	18.2	PDF	IES	7,610	119.1	18.3	PDF	IES	7,750	121.3	18.2	PDF	IES
	4000	55.8	6,112	109.5	18.6	PDF	IES	6,267	112.3	18.7	PDF	IES	6,495	116.4	18.8	PDF	IES	6,587	118.0	18.9	PDF	IES	6,705	120.2	18.8	PDF	IES
	3000	48.6	5,176	106.5	19.4	PDF	IES	5,307	109.2	19.4	PDF	IES	5,495	113.1	19.6	PDF	IES	5,573	114.7	19.6	PDF	IES	5,665	116.6	19.6	PDF	IES
	2000	41.1	4,253	103.5	20.3	PDF	IES	4,361	106.1	20.3	PDF	IES	4,514	109.8	20.5	PDF	IES	4,579	111.4	20.6	PDF	IES	4,644	113.0	20.5	PDF	IES
	1000	34.9	3,309	94.8	21.7	PDF	IES	3,388	97.1	21.7	PDF	IES	3,508	100.5	21.9	PDF	IES	3,559	102.0	21.9	PDF	IES	3,600	103.2	22.0	PDF	IES
2000	7000	76.2	8,424	110.6	15.6	PDF	IES	8,646	113.5	15.6	PDF	IES	9,013	118.3	15.7	PDF	IES	9,117	119.6	15.8	PDF	IES	9,292	121.9	15.7	PDF	IES
	6000	66.4	7,498	112.9	16.1	PDF	IES	7,696	115.9	16.1	PDF	IES	8,006	120.6	16.2	PDF	IES	8,107	122.1	16.3	PDF	IES	8,261	124.4	16.2	PDF	IES
	5000	58.3	6,585	113.0	16.6	PDF	IES	6,755	115.9	16.6	PDF	IES	7,013	120.3	16.8	PDF	IES	7,108	121.9	16.8	PDF	IES	7,243	124.2	16.8	PDF	IES
	4000	49.9	5,646	113.1	17.2	PDF	IES	5,789	116.0	17.3	PDF	IES	6,001	120.3	17.4	PDF	IES	6,085	121.9	17.5	PDF	IES	6,198	124.2	17.4	PDF	IES
	3000	42.7	4,709	110.3	18.0	PDF	IES	4,829	113.1	18.1	PDF	IES	5,000	117.1	18.2	PDF	IES	5,072	118.8	18.2	PDF	IES	5,159	120.8	18.3	PDF	IES
	2000	35.5	3,786	106.6	19.0	PDF	IES	3,884	109.4	19.1	PDF	IES	4,019	113.2	19.2	PDF	IES	4,077	114.8	19.3	PDF	IES	4,137	116.5	19.2	PDF	IES
	1000	29.1	2,842	97.7	20.5	PDF	IES	2,911	100.0	20.5	PDF	IES	3,013	103.5	20.7	PDF	IES	3,057	105.1	20.7	PDF	IES	3,093	106.3	20.7	PDF	IES
1500	7000	71.3	7,948	111.5	13.7	PDF	IES	8,162	114.5	13.7	PDF	IES	8,509	119.3	13.8	PDF	IES	8,606	120.7	13.9	PDF	IES	8,777	123.1	13.9	PDF	IES
	6000	61.5	7,022	114.2	14.2	PDF	IES	7,211	117.3	14.2	PDF	IES	7,502	122.0	14.3	PDF	IES	7,597	123.5	14.3	PDF	IES	7,746	126.0	14.4	PDF	IES
	5000	53.4	6,109	114.4	14.7	PDF	IES	6,270	117.4	14.8	PDF	IES	6,509	121.9	14.9	PDF	IES	6,597	123.5	15.0	PDF	IES	6,728	126.0	14.9	PDF	IES
	4000	45.3	5,170	114.1	15.4	PDF	IES	5,304	117.1	15.4	PDF	IES	5,497	121.3	15.6	PDF	IES	5,574	123.0	15.6	PDF	IES	5,683	125.5	15.6	PDF	IES
	3000	38.1	4,233	111.1	16.2	PDF	IES	4,344	114.0	16.3	PDF	IES	4,496	118.0	16.4	PDF	IES	4,561	119.7	16.5	PDF	IES	4,643	121.9	16.4	PDF	IES
	2000	30.7	3,310	107.8	17.3	PDF	IES	3,399	110.7	17.4	PDF	IES	3,515	114.5	17.6	PDF	IES	3,567	116.2	17.5	PDF	IES	3,622	118.0	17.6	PDF	IES
	1000	24.3	2,366	97.4	18.9	PDF	IES	2,426	99.8	19.0	PDF	IES	2,510	103.3	19.2	PDF	IES	2,546	104.8	19.1	PDF	IES	2,578	106.1	19.2	PDF	IES
1000	7000	66.4	7,465	112.4	10.9	PDF	IES	7,669	115.5	11.0	PDF	IES	7,997	120.4	11.1	PDF	IES	8,088	121.8	11.1	PDF	IES	8,254	124.3	11.0	PDF	IES
	6000	56.7	6,539	115.3	11.4	PDF	IES	6,719	118.5	11.4	PDF	IES	6,990	123.3	11.6	PDF	IES	7,078	124.8	11.6	PDF	IES	7,223	127.4	11.6	PDF	IES
	5000	48.5	5,626	116.0	12.0	PDF	IES	5,778	119.1	12.0	PDF	IES	5,998	123.7	12.1	PDF	IES	6,079	125.3	12.2	PDF	IES	6,205	127.9	12.1	PDF	IES
	4000	40.6	4,687	115.4	12.7	PDF	IES	4,812	118.5	12.7	PDF	IES	4,985	122.8	12.9	PDF	IES	5,056	124.5	12.8	PDF	IES	5,160	127.1	12.9	PDF	IES
	3000	33.4	3,750	112.3	13.6	PDF	IES	3,852	115.3	13.6	PDF	IES	3,984	119.3	13.8	PDF	IES	4,043	121.0	13.8	PDF	IES	4,121	123.4	13.7	PDF	IES
	2000	25.9	2,827	109.2	14.7	PDF	IES	2,906	112.2	14.7	PDF	IES	3,004	116.0	14.9	PDF	IES	3,048	117.7	15.0	PDF	IES	3,099	119.7	14.9	PDF	IES
	1000	19.6	1,883	96.1	16.5	PDF	IES	1,933	98.6	16.6	PDF	IES	1,998	101.9	16.8	PDF	IES	2,028	103.5	16.8	PDF	IES	2,055	104.8	16.8	PDF	IES

1. 4ft Luminaire photometry has been conducted in accordance with IES LM-79-08. IES files can be downloaded by clicking the links in the table above, or online at ledalite.com. Luminaires with finishes other than standard white may result in a drop in flux and efficacy.
2. Unified Glare Ratio (UGR) is calculated in accordance with CIE 117-1995. Reference conditions of 4Hx8Hx1H and reflectances of 70/50/20% have been applied using the procedure described in CIE 190-2010.
3. For Photometry reports and IES files combining Direct/Indirect distributions other than those listed above, please consult Ledalite.

Performance Symmetric Batwing Flush MesoOptic Lens
Spacing Criteria: 1.17/1.48

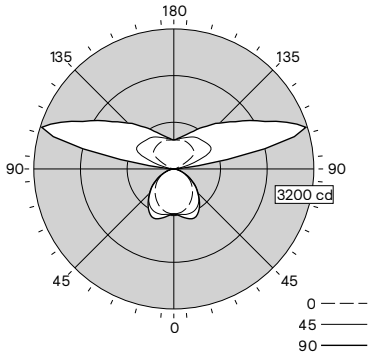

38% Down / 62% Up

Candela plot shown is for 3000lm/4ft Direct / 5000lm/4ft Indirect, CRI 90, 3500K configuration.

TruGroove suspended micro (lens)

Photometry

Direct/Indirect (TM05 & TM06) Performance Asymmetric Wall Wash Flush MesoOptic lens

Nominal CRI &CCT			CRI 90, 2700K					CRI 90, 3000K					CRI 90, 3500K					CRI 90, 4000K					CRI 90, 5000K				
Nominal Lumen Package (lm/4ft)		Watts	Flux (lm/4ft) [1]	Efficacy (LPW) [1]	UGR [5]	Photometry Report	IES File	Flux (lm/4ft) [1]	Efficacy (LPW) [1]	UGR [5]	Photometry Report	IES File	Flux (lm/4ft) [1]	Efficacy (LPW) [1]	UGR [5]	Photometry Report	IES File	Flux (lm/4ft) [1]	Efficacy (LPW) [1]	UGR [5]	Photometry Report	IES File	Flux (lm/4ft) [1]	Efficacy (LPW) [1]	UGR [5]	Photometry Report	IES File
Direct	Indirect																										
4000	6000	100.4	9,243	92.1	19.7	PDF	IES	9,494	94.6	19.7	PDF	IES	9,878	98.4	19.9	PDF	IES	9,990	99.5	19.9	PDF	IES	10,169	101.3	20.0	PDF	IES
	5000	88.7	8,321	93.8	20.2	PDF	IES	8,550	96.4	20.3	PDF	IES	8,877	100.1	20.4	PDF	IES	8,987	101.3	20.4	PDF	IES	9,144	103.1	20.4	PDF	IES
	4000	78.8	7,394	93.8	20.8	PDF	IES	7,594	96.4	20.7	PDF	IES	7,869	99.9	20.9	PDF	IES	7,972	101.2	20.9	PDF	IES	8,110	102.9	21.0	PDF	IES
	3000	69.3	6,465	93.3	21.4	PDF	IES	6,639	95.8	21.5	PDF	IES	6,871	99.1	21.6	PDF	IES	6,962	100.5	21.6	PDF	IES	7,077	102.1	21.6	PDF	IES
	2000	60.2	5,528	91.8	22.2	PDF	IES	5,680	94.4	22.3	PDF	IES	5,873	97.6	22.5	PDF	IES	5,951	98.9	22.5	PDF	IES	6,039	100.3	22.4	PDF	IES
	1000	52.3	4,580	87.6	23.3	PDF	IES	4,705	90.0	23.4	PDF	IES	4,865	93.0	23.5	PDF	IES	4,928	94.2	23.5	PDF	IES	4,990	95.4	23.6	PDF	IES
3500	6000	94.5	8,792	93.0	18.9	PDF	IES	9,025	95.5	18.9	PDF	IES	9,396	99.4	19.1	PDF	IES	9,504	100.6	19.1	PDF	IES	9,675	102.4	19.1	PDF	IES
	5000	82.9	7,871	94.9	19.4	PDF	IES	8,081	97.5	19.5	PDF	IES	8,395	101.3	19.5	PDF	IES	8,501	102.5	19.5	PDF	IES	8,650	104.3	19.6	PDF	IES
	4000	72.9	6,943	95.2	19.9	PDF	IES	7,125	97.7	20.0	PDF	IES	7,387	101.3	20.1	PDF	IES	7,486	102.7	20.2	PDF	IES	7,616	104.5	20.2	PDF	IES
	3000	63.4	6,014	94.9	20.6	PDF	IES	6,171	97.3	20.7	PDF	IES	6,389	100.8	20.8	PDF	IES	6,476	102.1	20.9	PDF	IES	6,583	103.8	20.8	PDF	IES
	2000	54.3	5,078	93.5	21.4	PDF	IES	5,211	96.0	21.5	PDF	IES	5,392	99.3	21.7	PDF	IES	5,466	100.7	21.7	PDF	IES	5,545	102.1	21.8	PDF	IES
	1000	46.5	4,130	88.8	22.6	PDF	IES	4,236	91.1	22.7	PDF	IES	4,383	94.3	22.9	PDF	IES	4,442	95.5	22.9	PDF	IES	4,496	96.7	22.9	PDF	IES
3000	6000	88.9	8,345	93.9	17.9	PDF	IES	8,562	96.3	18.0	PDF	IES	8,920	100.3	18.1	PDF	IES	9,023	101.5	18.1	PDF	IES	9,186	103.3	18.1	PDF	IES
	5000	77.2	7,424	96.2	18.5	PDF	IES	7,618	98.7	18.5	PDF	IES	7,919	102.6	18.6	PDF	IES	8,019	103.9	18.6	PDF	IES	8,161	105.7	18.6	PDF	IES
	4000	67.3	6,496	96.5	19.0	PDF	IES	6,662	99.0	19.1	PDF	IES	6,911	102.7	19.2	PDF	IES	7,004	104.1	19.3	PDF	IES	7,127	105.9	19.2	PDF	IES
	3000	58.0	5,567	96.0	19.8	PDF	IES	5,708	98.4	19.8	PDF	IES	5,913	101.9	20.0	PDF	IES	5,995	103.4	19.9	PDF	IES	6,094	105.1	20.0	PDF	IES
	2000	48.8	4,631	94.9	20.6	PDF	IES	4,748	97.3	20.7	PDF	IES	4,915	100.7	20.8	PDF	IES	4,984	102.1	20.9	PDF	IES	5,056	103.6	20.9	PDF	IES
	1000	41.1	3,682	89.6	21.9	PDF	IES	3,773	91.8	22.0	PDF	IES	3,906	95.0	22.1	PDF	IES	3,961	96.4	22.2	PDF	IES	4,007	97.5	22.2	PDF	IES
2500	6000	83.5	7,887	94.5	16.8	PDF	IES	8,091	96.9	16.8	PDF	IES	8,433	101.0	16.9	PDF	IES	8,529	102.1	16.9	PDF	IES	8,687	104.0	16.9	PDF	IES
	5000	71.8	6,965	97.0	17.2	PDF	IES	7,146	99.5	17.3	PDF	IES	7,431	103.5	17.5	PDF	IES	7,526	104.8	17.5	PDF	IES	7,662	106.7	17.5	PDF	IES
	4000	61.9	6,038	97.5	17.8	PDF	IES	6,190	100.0	17.9	PDF	IES	6,424	103.8	18.1	PDF	IES	6,511	105.2	18.1	PDF	IES	6,628	107.1	18.1	PDF	IES
	3000	52.8	5,109	96.8	18.7	PDF	IES	5,236	99.2	18.8	PDF	IES	5,426	102.8	18.9	PDF	IES	5,502	104.2	18.9	PDF	IES	5,595	106.0	18.9	PDF	IES
	2000	43.6	4,172	95.7	19.7	PDF	IES	4,277	98.1	19.6	PDF	IES	4,428	101.6	19.9	PDF	IES	4,491	103.0	19.8	PDF	IES	4,557	104.5	19.9	PDF	IES
	1000	35.9	3,224	89.8	21.0	PDF	IES	3,302	92.0	21.1	PDF	IES	3,419	95.2	21.2	PDF	IES	3,467	96.6	21.2	PDF	IES	3,508	97.7	21.3	PDF	IES
2000	6000	77.9	7,434	95.4	15.4	PDF	IES	7,628	97.9	15.4	PDF	IES	7,954	102.1	15.5	PDF	IES	8,044	103.3	15.5	PDF	IES	8,196	105.2	15.5	PDF	IES
	5000	66.2	6,513	98.4	15.8	PDF	IES	6,684	101.0	15.9	PDF	IES	6,952	105.0	16.0	PDF	IES	7,040	106.3	16.1	PDF	IES	7,171	108.3	16.0	PDF	IES
	4000	56.3	5,585	99.2	16.5	PDF	IES	5,728	101.7	16.6	PDF	IES	5,945	105.6	16.7	PDF	IES	6,025	107.0	16.7	PDF	IES	6,137	109.0	16.7	PDF	IES
	3000	46.9	4,656	99.3	17.2	PDF	IES	4,774	101.8	17.3	PDF	IES	4,946	105.5	17.5	PDF	IES	5,016	107.0	17.5	PDF	IES	5,104	108.8	17.6	PDF	IES
	2000	38.0	3,720	97.9	18.4	PDF	IES	3,814	100.4	18.4	PDF	IES	3,949	103.9	18.6	PDF	IES	4,005	105.4	18.5	PDF	IES	4,066	107.0	18.6	PDF	IES
	1000	30.3	2,772	91.5	19.8	PDF	IES	2,839	93.7	19.9	PDF	IES	2,940	97.0	20.0	PDF	IES	2,982	98.4	20.1	PDF	IES	3,018	99.6	20.1	PDF	IES
1500	6000	73.0	6,974	95.5	13.4	PDF	IES	7,159	98.1	13.4	PDF	IES	7,466	102.3	13.6	PDF	IES	7,549	103.4	13.6	PDF	IES	7,697	105.4	13.6	PDF	IES
	5000	61.3	6,052	98.7	14.0	PDF	IES	6,214	101.4	14.0	PDF	IES	6,464	105.4	14.2	PDF	IES	6,545	106.8	14.1	PDF	IES	6,672	108.8	14.2	PDF	IES
	4000	51.4	5,124	99.7	14.7	PDF	IES	5,258	102.3	14.7	PDF	IES	5,457	106.2	14.9	PDF	IES	5,530	107.6	14.8	PDF	IES	5,638	109.7	14.8	PDF	IES
	3000	42.2	4,195	99.4	15.5	PDF	IES	4,304	102.0	15.6	PDF	IES	4,459	105.7	15.7	PDF	IES	4,521	107.1	15.7	PDF	IES	4,605	109.1	15.7	PDF	IES
	2000	33.2	3,259	98.2	16.6	PDF	IES	3,344	100.7	16.6	PDF	IES	3,461	104.2	16.8	PDF	IES	3,510	105.7	16.8	PDF	IES	3,567	107.4	16.8	PDF	IES
	1000	25.4	2,311	91.0	18.2	PDF	IES	2,369	93.3	18.3	PDF	IES	2,452	96.5	18.5	PDF	IES	2,487	97.9	18.5	PDF	IES	2,519	99.2	18.5	PDF	IES
1000	6000	68.1	6,506	95.5	10.6	PDF	IES	6,681	98.1	10.7	PDF	IES	6,970	102.3	10.8	PDF	IES	7,047	103.5	10.8	PDF	IES	7,191	105.6	10.9	PDF	IES
	5000	56.4	5,584	99.0	11.2	PDF	IES	5,737	101.7	11.3	PDF	IES	5,969	105.8	11.4	PDF	IES	6,043	107.1	11.5	PDF	IES	6,166	109.3	11.4	PDF	IES
	4000	46.6	4,657	99.9	11.9	PDF	IES	4,781	102.6	11.9	PDF	IES	4,961	106.5	12.2	PDF	IES	5,028	107.9	12.1	PDF	IES	5,132	110.1	12.1	PDF	IES
	3000	37.6	3,728	99.1	12.8	PDF	IES	3,827	101.8	12.9	PDF	IES	3,963	105.4	13.0	PDF	IES	4,019	106.9	13.0	PDF	IES	4,099	109.0	13.0	PDF	IES
	2000	28.4	2,791	98.3	14.0	PDF	IES	2,867	101.0	14.1	PDF	IES	2,965	104.4	14.2	PDF	IES	3,008	105.9	14.2	PDF	IES	3,061	107.8	14.2	PDF	IES
	1000	20.7	1,843	89.0	15.8	PDF	IES	1,892	91.4	15.9	PDF	IES	1,957	94.5	16.0	PDF	IES	1,985	95.9	16.1	PDF	IES	2,012	97.2	16.1	PDF	IES

1. 4ft Luminaire photometry has been conducted in accordance with IES LM-79-08. IES files can be downloaded by clicking the links in the table above, or online at ledalite.com. Luminaires with finishes other than standard white may result in a drop in flux and efficacy.
2. Unified Glare Ratio (UGR) is calculated in accordance with CIE 117-1995. Reference conditions of 4Hx8Hx1H and reflectances of 70/50/20% have been applied using the procedure described in CIE 190-2010.
3. For Photometry reports and IES files combining Direct/Indirect distributions other than those listed above, please consult Ledalite.

Performance Asymmetric Wall Wash Flush MesoOptic lens
Spacing Criteria: 1.44/1.23

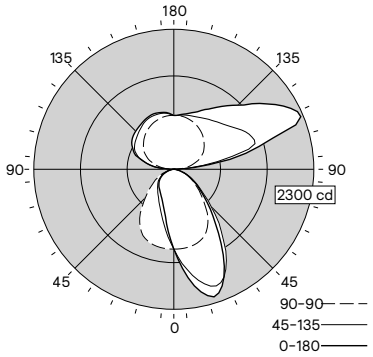

37% Down / 63% Up

Candela plot shown is for 3000lm/4ft Direct / 5000lm/4ft Indirect, CRI 90, 3500K configuration.

TruGroove suspended micro (lens)

Photometry

Direct/Indirect (TM05 & TM06) Definition Symmetric Flush Silk lens

Nominal CRI &CCT			CRI 90, 2700K					CRI 90, 3000K					CRI 90, 3500K					CRI 90, 4000K					CRI 90, 5000K				
Nominal Lumen Package (lm/4ft)		Watts	Flux (lm/4ft) [1]	Efficacy (LPW) [1]	UGR [5]	Photometry Report	IES File	Flux (lm/4ft) [1]	Efficacy (LPW) [1]	UGR [5]	Photometry Report	IES File	Flux (lm/4ft) [1]	Efficacy (LPW) [1]	UGR [5]	Photometry Report	IES File	Flux (lm/4ft) [1]	Efficacy (LPW) [1]	UGR [5]	Photometry Report	IES File	Flux (lm/4ft) [1]	Efficacy (LPW) [1]	UGR [5]	Photometry Report	IES File
Direct	Indirect																										
4000	7000	98.7	10,487	106.3	21.9	PDF	IES	10,774	109.2	22.0	PDF	IES	11,208	113.6	22.0	PDF	IES	11,338	114.9	22.0	PDF	IES	11,542	116.9	22.1	PDF	IES
	6000	88.9	9,561	107.5	22.2	PDF	IES	9,824	110.5	22.3	PDF	IES	10,201	114.7	22.5	PDF	IES	10,328	116.2	22.5	PDF	IES	10,511	118.2	22.5	PDF	IES
	5000	80.8	8,648	107.0	22.7	PDF	IES	8,883	109.9	22.8	PDF	IES	9,209	114.0	22.9	PDF	IES	9,329	115.5	23.0	PDF	IES	9,494	117.5	22.9	PDF	IES
	4000	72.4	7,709	106.5	23.3	PDF	IES	7,917	109.4	23.4	PDF	IES	8,196	113.2	23.5	PDF	IES	8,306	114.7	23.5	PDF	IES	8,448	116.7	23.5	PDF	IES
	3000	65.0	6,772	104.2	23.8	PDF	IES	6,957	107.0	23.9	PDF	IES	7,196	110.7	24.1	PDF	IES	7,293	112.2	24.1	PDF	IES	7,409	114.0	24.2	PDF	IES
	2000	57.6	5,850	101.6	24.6	PDF	IES	6,012	104.4	24.7	PDF	IES	6,215	107.9	24.8	PDF	IES	6,298	109.3	24.9	PDF	IES	6,387	110.9	24.9	PDF	IES
	1000	51.2	4,906	95.8	25.7	PDF	IES	5,039	98.4	25.8	PDF	IES	5,209	101.7	25.9	PDF	IES	5,278	103.1	26.0	PDF	IES	5,343	104.4	26.0	PDF	IES
3500	7000	92.9	9,998	107.6	21.0	PDF	IES	10,265	110.5	21.1	PDF	IES	10,685	115.0	21.2	PDF	IES	10,810	116.4	21.3	PDF	IES	11,005	118.5	21.2	PDF	IES
	6000	83.1	9,072	109.2	21.5	PDF	IES	9,315	112.1	21.6	PDF	IES	9,678	116.5	21.6	PDF	IES	9,800	117.9	21.6	PDF	IES	9,975	120.0	21.7	PDF	IES
	5000	74.9	8,159	108.9	21.9	PDF	IES	8,374	111.8	22.0	PDF	IES	8,685	116.0	22.1	PDF	IES	8,801	117.5	22.2	PDF	IES	8,957	119.6	22.1	PDF	IES
	4000	66.6	7,220	108.4	22.5	PDF	IES	7,408	111.2	22.6	PDF	IES	7,673	115.2	22.7	PDF	IES	7,778	116.8	22.7	PDF	IES	7,911	118.8	22.7	PDF	IES
	3000	59.2	6,283	106.1	23.2	PDF	IES	6,448	108.9	23.3	PDF	IES	6,672	112.7	23.4	PDF	IES	6,765	114.3	23.4	PDF	IES	6,872	116.1	23.4	PDF	IES
	2000	51.7	5,360	103.7	23.9	PDF	IES	5,502	106.4	24.0	PDF	IES	5,691	110.1	24.2	PDF	IES	5,770	111.6	24.2	PDF	IES	5,850	113.2	24.2	PDF	IES
	1000	45.4	4,416	97.3	25.1	PDF	IES	4,529	99.8	25.1	PDF	IES	4,686	103.2	25.3	PDF	IES	4,750	104.6	25.3	PDF	IES	4,806	105.9	25.4	PDF	IES
3000	7000	87.2	9,512	109.1	20.0	PDF	IES	9,762	111.9	20.1	PDF	IES	10,167	116.6	20.3	PDF	IES	10,287	118.0	20.3	PDF	IES	10,474	120.1	20.3	PDF	IES
	6000	77.4	8,586	110.9	20.5	PDF	IES	8,812	113.9	20.6	PDF	IES	9,160	118.3	20.7	PDF	IES	9,277	119.9	20.7	PDF	IES	9,444	122.0	20.7	PDF	IES
	5000	69.3	7,673	110.7	21.0	PDF	IES	7,871	113.6	21.1	PDF	IES	8,168	117.9	21.2	PDF	IES	8,278	119.5	21.2	PDF	IES	8,426	121.6	21.2	PDF	IES
	4000	61.0	6,734	110.4	21.6	PDF	IES	6,905	113.2	21.6	PDF	IES	7,155	117.3	21.7	PDF	IES	7,255	118.9	21.8	PDF	IES	7,381	121.0	21.8	PDF	IES
	3000	53.8	5,797	107.8	22.3	PDF	IES	5,945	110.5	22.3	PDF	IES	6,155	114.4	22.5	PDF	IES	6,242	116.0	22.5	PDF	IES	6,341	117.9	22.5	PDF	IES
	2000	46.3	4,875	105.3	23.1	PDF	IES	4,999	108.0	23.2	PDF	IES	5,174	111.7	23.3	PDF	IES	5,247	113.3	23.4	PDF	IES	5,320	114.9	23.4	PDF	IES
	1000	40.1	3,931	98.0	24.4	PDF	IES	4,027	100.4	24.4	PDF	IES	4,168	103.9	24.6	PDF	IES	4,227	105.4	24.6	PDF	IES	4,276	106.6	24.6	PDF	IES
2500	7000	81.8	9,014	110.2	18.9	PDF	IES	9,250	113.1	18.9	PDF	IES	9,638	117.8	19.1	PDF	IES	9,751	119.2	19.1	PDF	IES	9,932	121.4	19.1	PDF	IES
	6000	72.0	8,088	112.3	19.4	PDF	IES	8,300	115.3	19.4	PDF	IES	8,631	119.9	19.5	PDF	IES	8,741	121.4	19.5	PDF	IES	8,901	123.6	19.6	PDF	IES
	5000	63.9	7,175	112.3	19.8	PDF	IES	7,358	115.1	19.9	PDF	IES	7,639	119.5	20.1	PDF	IES	7,742	121.2	20.1	PDF	IES	7,884	123.4	20.1	PDF	IES
	4000	55.8	6,236	111.8	20.5	PDF	IES	6,393	114.6	20.5	PDF	IES	6,626	118.7	20.7	PDF	IES	6,719	120.4	20.7	PDF	IES	6,838	122.5	20.7	PDF	IES
	3000	48.6	5,299	109.0	21.2	PDF	IES	5,432	111.8	21.3	PDF	IES	5,626	115.8	21.4	PDF	IES	5,706	117.4	21.5	PDF	IES	5,799	119.3	21.4	PDF	IES
	2000	41.1	4,376	106.5	22.1	PDF	IES	4,487	109.2	22.2	PDF	IES	4,645	113.0	22.3	PDF	IES	4,711	114.6	22.4	PDF	IES	4,777	116.2	22.3	PDF	IES
	1000	34.9	3,432	98.3	23.5	PDF	IES	3,514	100.7	23.5	PDF	IES	3,639	104.3	23.7	PDF	IES	3,691	105.8	23.6	PDF	IES	3,733	107.0	23.7	PDF	IES
2000	7000	76.2	8,523	111.9	17.4	PDF	IES	8,747	114.8	17.5	PDF	IES	9,118	119.7	17.7	PDF	IES	9,223	121.0	17.7	PDF	IES	9,399	123.3	17.7	PDF	IES
	6000	66.4	7,596	114.4	17.9	PDF	IES	7,797	117.4	17.9	PDF	IES	8,111	122.2	18.1	PDF	IES	8,213	123.7	18.1	PDF	IES	8,368	126.0	18.2	PDF	IES
	5000	58.3	6,683	114.6	18.5	PDF	IES	6,856	117.6	18.5	PDF	IES	7,118	122.1	18.6	PDF	IES	7,214	123.7	18.7	PDF	IES	7,351	126.1	18.6	PDF	IES
	4000	49.9	5,744	115.1	19.1	PDF	IES	5,890	118.0	19.2	PDF	IES	6,106	122.4	19.3	PDF	IES	6,191	124.1	19.3	PDF	IES	6,305	126.4	19.3	PDF	IES
	3000	42.7	4,808	112.6	19.9	PDF	IES	4,930	115.5	19.9	PDF	IES	5,105	119.6	20.1	PDF	IES	5,178	121.3	20.1	PDF	IES	5,266	123.3	20.1	PDF	IES
	2000	35.5	3,885	109.4	20.8	PDF	IES	3,984	112.2	20.9	PDF	IES	4,124	116.2	21.0	PDF	IES	4,183	117.8	21.1	PDF	IES	4,244	119.5	21.1	PDF	IES
	1000	29.1	2,941	101.1	22.3	PDF	IES	3,012	103.5	22.3	PDF	IES	3,119	107.2	22.6	PDF	IES	3,163	108.7	22.5	PDF	IES	3,200	110.0	22.5	PDF	IES
1500	7000	71.3	8,022	112.5	15.5	PDF	IES	8,237	115.5	15.6	PDF	IES	8,588	120.4	15.8	PDF	IES	8,686	121.8	15.8	PDF	IES	8,857	124.2	15.8	PDF	IES
	6000	61.5	7,096	115.4	16.0	PDF	IES	7,287	118.5	16.1	PDF	IES	7,581	123.3	16.2	PDF	IES	7,676	124.8	16.3	PDF	IES	7,826	127.3	16.3	PDF	IES
	5000	53.4	6,183	115.8	16.6	PDF	IES	6,346	118.8	16.6	PDF	IES	6,588	123.4	16.8	PDF	IES	6,677	125.0	16.8	PDF	IES	6,808	127.5	16.8	PDF	IES
	4000	45.3	5,244	115.8	17.3	PDF	IES	5,380	118.8	17.3	PDF	IES	5,576	123.1	17.5	PDF	IES	5,654	124.8	17.5	PDF	IES	5,763	127.2	17.5	PDF	IES
	3000	38.1	4,307	113.0	18.1	PDF	IES	4,420	116.0	18.2	PDF	IES	4,575	120.1	18.3	PDF	IES	4,640	121.8	18.3	PDF	IES	4,724	124.0	18.3	PDF	IES
	2000	30.7	3,384	110.2	19.1	PDF	IES	3,474	113.2	19.2	PDF	IES	3,594	117.1	19.3	PDF	IES	3,646	118.8	19.4	PDF	IES	3,702	120.6	19.3	PDF	IES
	1000	24.3	2,440	100.4	20.7	PDF	IES	2,501	102.9	20.8	PDF	IES	2,588	106.5	20.9	PDF	IES	2,626	108.1	21.0	PDF	IES	2,658	109.4	21.0	PDF	IES
1000	7000	66.4	7,514	113.2	12.8	PDF	IES	7,719	116.3	12.8	PDF	IES	8,049	121.2	12.9	PDF	IES	8,140	122.6	13.0	PDF	IES	8,307	125.1	13.0	PDF	IES
	6000	56.7	6,588	116.2	13.3	PDF	IES	6,769	119.4	13.3	PDF	IES	7,042	124.2	13.5	PDF	IES	7,130	125.7	13.5	PDF	IES	7,276	128.3	13.5	PDF	IES
	5000	48.5	5,675	117.0	13.8	PDF	IES	5,827	120.1	13.9	PDF	IES	6,049	124.7	14.1	PDF	IES	6,131	126.4	14.1	PDF	IES	6,258	129.0	14.1	PDF	IES
	4000	40.6	4,736	116.7	14.5	PDF	IES	4,862	119.8	14.6	PDF	IES	5,037	124.1	14.7	PDF	IES	5,108	125.8	14.8	PDF	IES	5,213	128.4	14.7	PDF	IES
	3000	33.4	3,799	113.7	15.4	PDF	IES	3,901	116.8	15.4	PDF	IES	4,036	120.8	15.7	PDF	IES	4,095	122.6	15.6	PDF	IES	4,173	124.9	15.7	PDF	IES
	2000	25.9	2,876	111.0	16.6	PDF	IES	2,956	114.1	16.7	PDF	IES	3,056	118.0	16.8	PDF	IES	3,100	119.7	16.8	PDF	IES	3,152	121.7	16.8	PDF	IES
	1000	19.6	1,932	98.6	18.4	PDF	IES	1,983	101.2	18.5	PDF	IES	2,050	104.6	18.6	PDF	IES	2,080	106.1	18.6	PDF	IES	2,108	107.6	18.6	PDF	IES

1. 4ft Luminaire photometry has been conducted in accordance with IES LM-79-08. IES files can be downloaded by clicking the links in the table above, or online at ledalite.com. Luminaires with finishes other than standard white may result in a drop in flux and efficacy.
2. Unified Glare Ratio (UGR) is calculated in accordance with CIE 117-1995. Reference conditions of 4Hx8Hx1H and reflectances of 70/50/20% have been applied using the procedure described in CIE 190-2010.
3. For Photometry reports and IES files combining Direct/Indirect distributions other than those listed above, please consult Ledalite.

Definition Symmetric Flush Silk lens
Spacing Criteria: 1.23/1.22

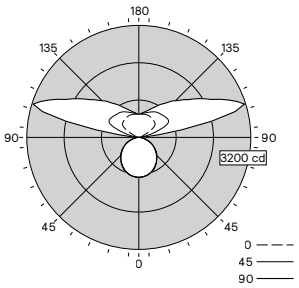

39% Down / 61% Up

Candela plot shown is for 3000lm/4ft Direct / 5000lm/4ft Indirect, CRI 90, 3500K configuration.

© 2025 Signify Holding. All rights reserved. The information provided herein is subject to change, without notice. Signify does not give any representation or warranty as to the accuracy or completeness of the information included herein and shall not be liable for any action in reliance thereon. The information presented in this document is not intended as any commercial offer and does not form part of any quotation or contract, unless otherwise agreed by Signify.

GENLYTE SOLUTIONS
a signify business

Signify North America Corp.
400 Crossing Blvd, Suite 600
Bridgewater, NJ 08807
Telephone: 800-555-0050

Signify Canada Ltd.
281 Hillmount Road,
Markham, ON, Canada L6C 2S3
Telephone: 800-668-9008

All trademarks are owned by Signify Holding or their respective owners.