PHILIPS

hue

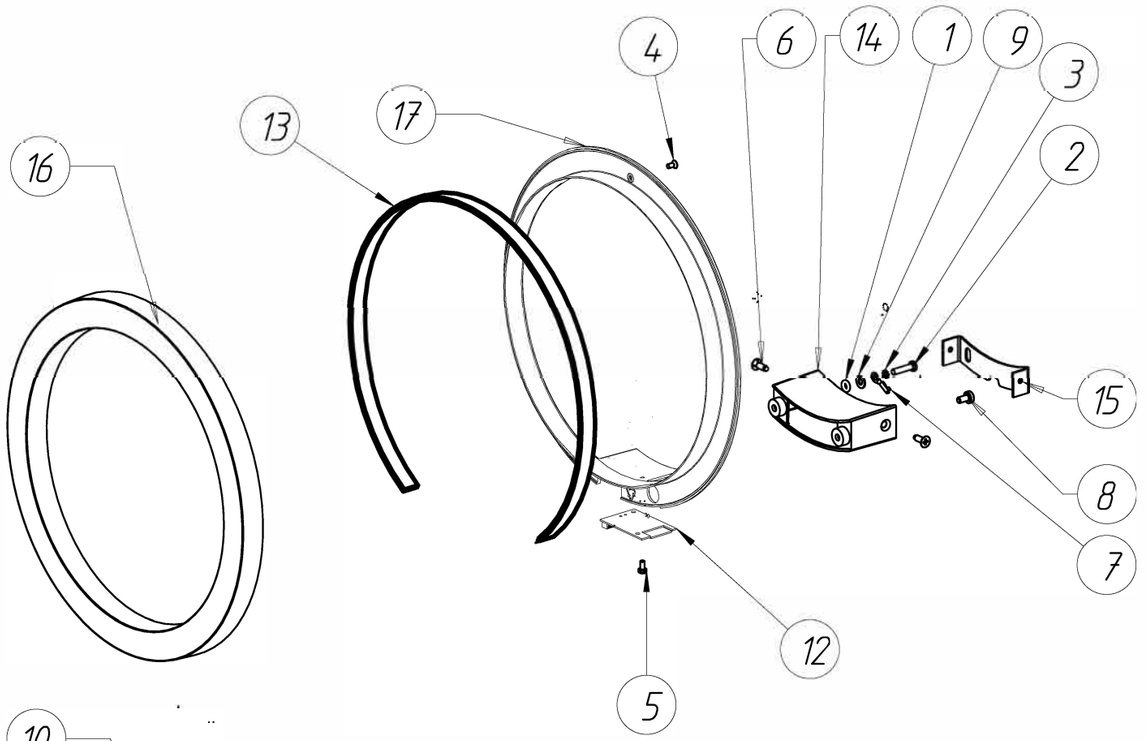

Warnings
Always make sure the luminaire is detached from the mains socket
Always make sure the DC cable is detached from the power supply
Staring at the operating light source may cause eye injury

#	Disassemble/dismantle steps	Tools needed
a	Remove braket (15) by removing screws (6)	CROSSHEAD SCREWDRIVER PZ
b	Remove base (14) by unscrewing screws (2) and (8)	TORXHEAD SCREW DRIVER T10 and CROSSHEAD SCREWDRIVER PZ
c	Remove screw (5)	TORXHEAD SCREW DRIVER T10
d	Remove low voltage wires of the LIGHT SOURCE - LED STRIP (13)	-
e	Remove low voltage wires from LIGHT SOURCE - HUE CONNECT (12).	FLATHEAD SCREWDRIVER OR WAGO TOOL #2065
f	Remove the diffuser by unscrewing screw (4)	CROSSHEAD SCREWDRIVER PZ
g	Remove LIGHT SOURCE - LED STRIP	See document: 200604 - Instruction LED Strip Removal Procedure

- A specific Wago tool #2065 can be ordered separately for wire insertion and release tool:

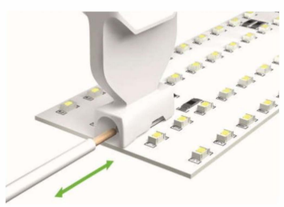



#	COMPONENT	QTY
1	O-RING	1
2	SCREW	1
3	TOOTHED WASHER	1
4	SCREW	1
5	SCREW	1
6	SCREW	2
7	RING TERMINAL	1
8	SCREW	1
9	WASHER	1
10	CONTROL GEAR - PSU	1
11	PLUG	1
12	LIGHT SOURCE - HUE CONNECT	1
13	LIGHT SOURCE - LED STRIP	1
14	BASE	1
15	BRACKET	1
16	COVER	1
17	DIFFUSER	1

SKU	Color	Country
929003053001	White	EU
929003053101	Black	EU

STATUS	DESCRIPTION	DESIGN ID	01	2021-06-25
	SANA Hue wall 20W 24V Disassembly instruction	DOC 12NC		
NAME He Go	LOCAL PART ID	SH. 3		A3-L
CHECKED	DATE 2021-06-25			

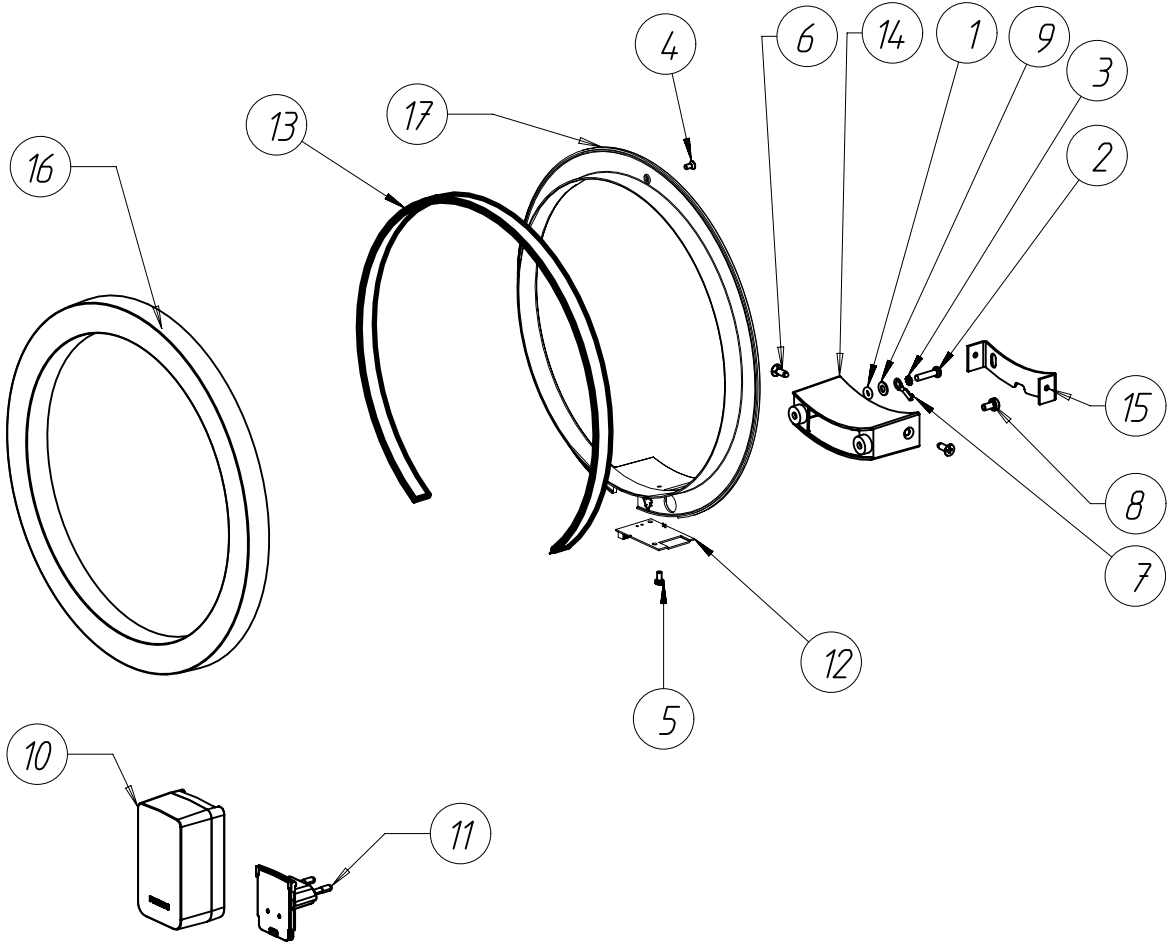
16
13
17
4
6
14
1
9
3
2
15
8
7
12
5
10
11