PHILIPS
hue

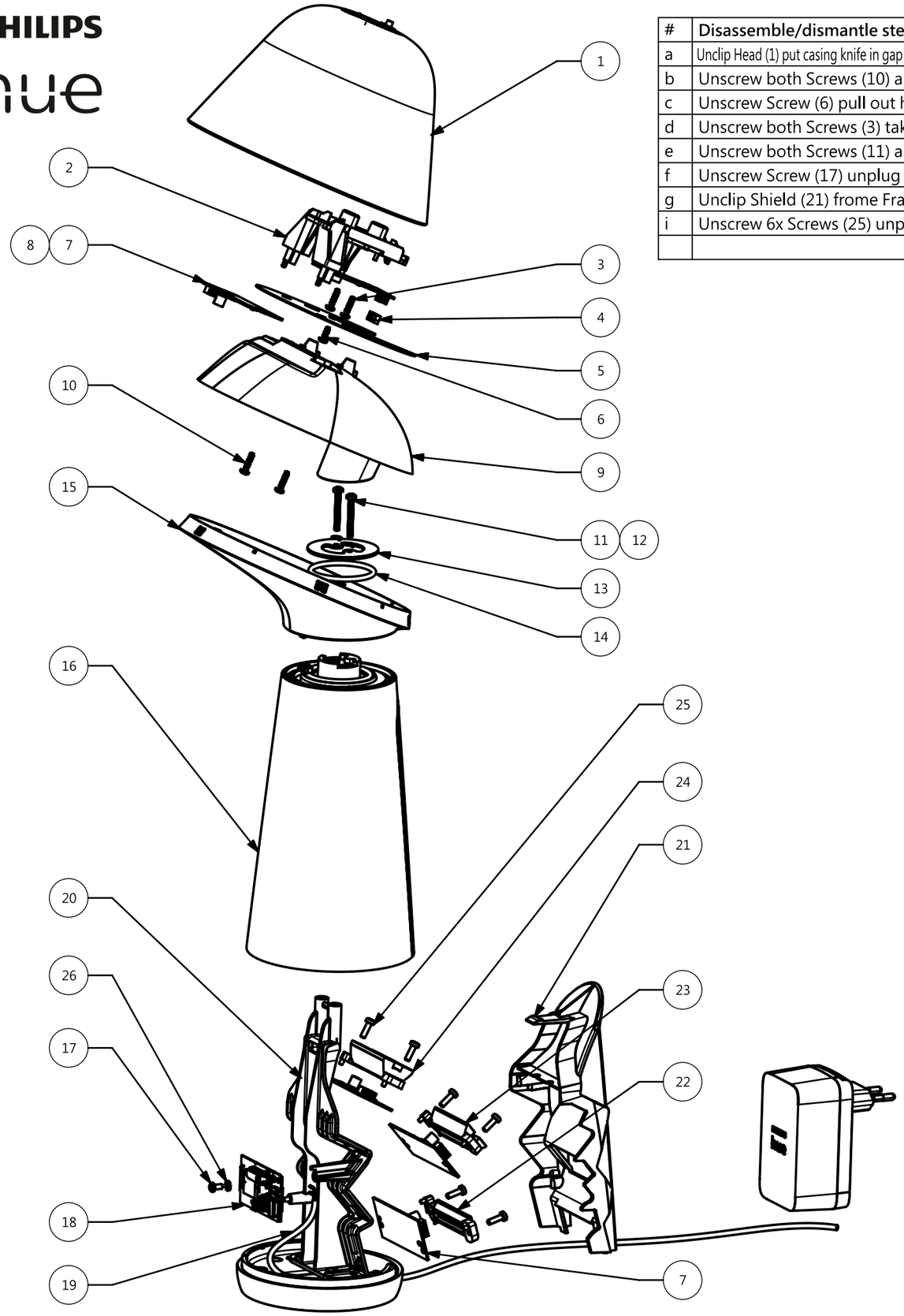

#	Disassemble/dismantle steps	Tools needed
a	Unclip Head (1) put casing knife in gap between head (1) and diffuser (15) then gently lever out tool and move it around perimeter	Watch Casing knife
b	Unscrew both Screws (10) and move reflector (9) away from head (1)	TORXHEAD SCREW DRIVER T10
c	Unscrew Screw (6) pull out heatsink (5) unplug cable (8) from LED (7)	TORXHEAD SCREW DRIVER T10
d	Unscrew both Screws (3) take out button frame (2) and disconnect button cable (4)	TORXHEAD SCREW DRIVER T10
e	Unscrew both Screws (11) and slide of Base (16)	TORXHEAD SCREW DRIVER T10
f	Unscrew Screw (17) unplug three cables (4, 8 and 19) from HUE Connect (18)	TORXHEAD SCREW DRIVER T10 and WAGO 2065
g	Unclip Shield (21) frome Frame (20)	
i	Unscrew 6x Screws (25) unplug 3x cable (8) from LED (7)	TORXHEAD SCREW DRIVER T10

#	COMPONENT	QTY
1	Head	1
2	Button frame	1
3	Screw	2
4	Button cable	1
5	Heatsink	1
6	Screw	1
7	LIGHT SOURCE - LED MODULE	4
8	Connection Power cable	1
9	Reflector	1
10	Screw	2
11	Screw	2
12	Spring washer	2
13	Hinge fixing part	1
14	O-ring	2
15	Diffuser	1
16	Base	1
17	Screw	1
18	LIGHT SOURCE - HUE CONNECT	1
19	DC Cable	1
20	Frame	1
21	Shield	1
22	Lens B	1
23	Lens M	1
24	Lens T	1
25	Screw	6
26	Washer	1

Watch Casing knife
- Head width on outer end 10mm (wider is OK too)
- Head thickness 1.5mm (smaller is OK too)

- A specific Wago tool #2065 can be ordered separately for wire insertion and release tool:

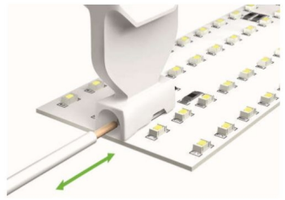

SKU	Color	Country
929003711201	White	EU/UK
929003711301	Black	EU/UK

Warnings
Always make sure the luminaire is detached from the mains socket
Always make sure the DC cable is detached from the power supply
Staring at the operating light source may cause eye injury

STATUS	DESCRIPTION	DESIGN ID	01	2024-03-28
Approved 2024-04-15	Hue Twilight sleep and wake-up light	D0135846		
		DOC 12NC 929003711201		
NAME Tom Ob	LOCAL PART ID	SH. 1	SH. 511-1	A3-L
CHECKED	DATE 2024-03-28		CONFIDENTIAL, PROPERTY OF: © 2024 Signify Holding	