PHILIPS

hue

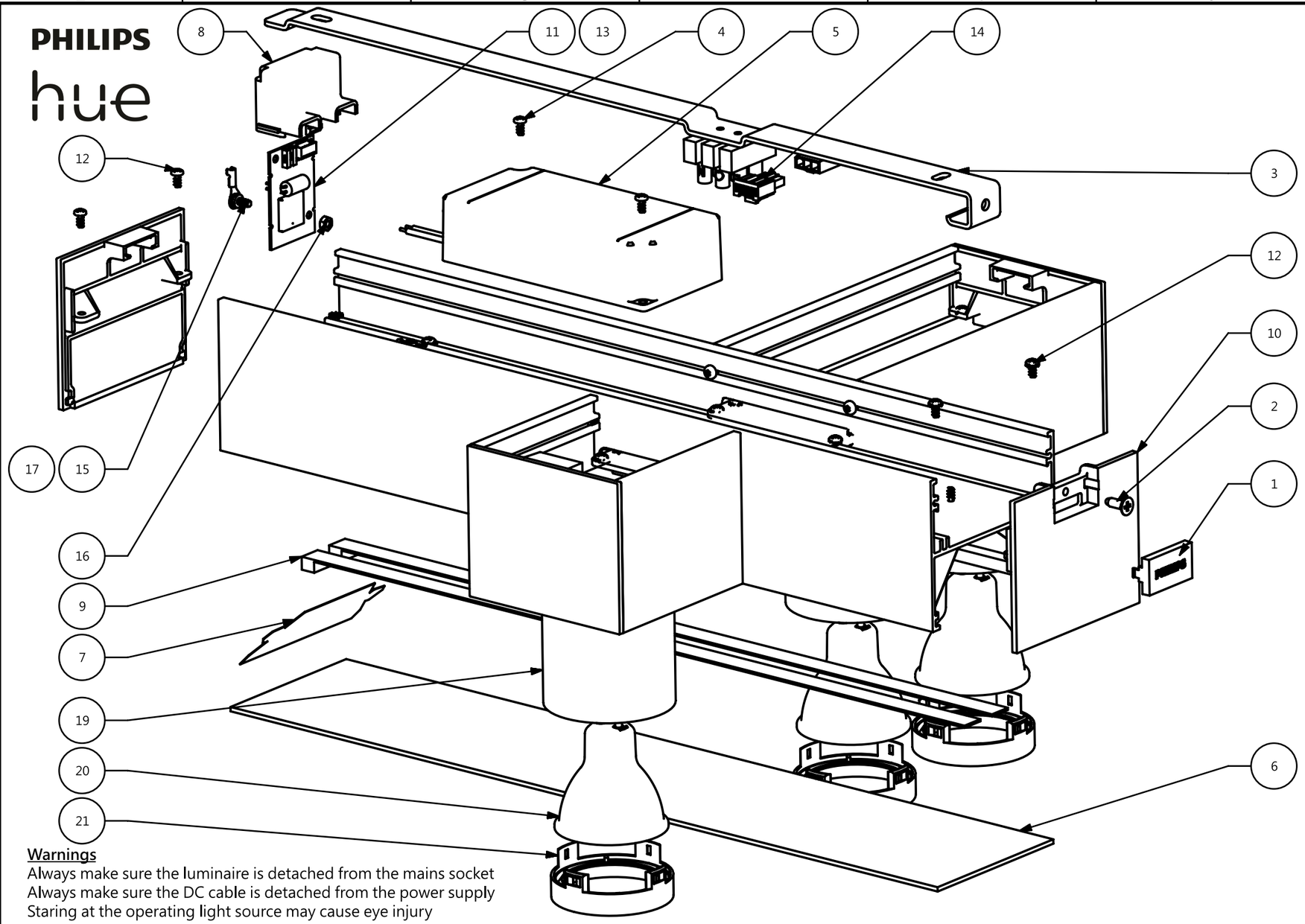

#	COMPONENT	QTY
1	COVER	2
2	SCREW	2
3	BRACKET	1
4	SCREW	2
5	CONTROL GEAR - PSU	1
6	DIFFUSER	1
7	REFLECTOR	1
8	COVER	1
9	LIGHT SOURCE - LED STRIP	2
10	END CAP	1
11	CONTROL GEAR - HUE CONNECT	1
12	SCREW	4
13	CONNECTION CABLE	1
14	TERMINAL BLOCK	1
15	SCREW	1
16	NUT	1
17	WIRE	1
18	END CAP	1
19	TUBE	3
20	GU 10 BULB	3
21	COVER	3

Warnings

Always make sure the luminaire is detached from the mains socket
Always make sure the DC cable is detached from the power supply
Staring at the operating light source may cause eye injury

SKU	Color	Country
929003809101	WHITE	EU/UK
929003809001	BLACK	EU/UK

#	Disassembly Instructions	Tools needed
a	REMOVE COVER (1) GENTLY LIFTING THEM OUT	FLATHEAD SCREWDRIVER
b	UNSCREW SCREW (2)	CROSSHEAD SCREWDRIVER PZ
c	DISCONECT TERMINAL BLOCK (14) SILDING IT OUT AT THE SAME TIME PUSHING SAFETY LEVER ON IT	-
d	TAKE A SIDE BRACKET (3) UNHOOKING IT FROM END CAP (10)	-
e	REMOVE BOTH END CAPS (10) (18) BY UNSCREWING SCREWS (12)	TORXHEAD SCREW DRIVER T10
f	SLIDE OUT DIFFUSER (6)	
g	PULL OUT REFLECTOR (7)	
h	UNPLUG CONNECTION CABLES (13) FROM BOTH LIGHT SOURCE-LED STRIPS (9)	
i	REMOVE LIGHT SOURCE-LED STRIPS (9) ACCORDING INSTRUCTION 442295215544_L2 REMOVAL AND TEST INSTRUCTION FLEX LED STRIP	SEE INSTRUCTION
j	REMOVE THE COVER (8) BY TILTING IT FORWARD WHILE SQUEEZING IT WITH YOUR FINGER BETWEEN THE CABLE EXITS	
k	SLIDE OUT CONTROL GEAR - HUE CONNECT (11) FROM THE COVER (8)	
l	UNPLUG CONNECTION CABLE (13) AND POWER WIRES FROM CONTROL GEAR - HUE CONNECT (11)	WAGO TOOL #2065
m	DETACH WIRE (19) BY UNSCREWING SCREW (17) FROM NUT (18)	ALLEN KEY, PINCER
n	CUT OUT MAIN WIRES OF CONTROL GEAR PSU (5)	CUTTING PLIERS
o	REMOVE CONTROL GEAR PSU (5) BY UNSCREWING BOTH SCREWS (4)	ALLEN KEY
p	REMOVE COVERS (21) BY ROTATING THEM AND PULLING OUT FROM TUBES (19)	
r	REMOVE GU 10 BULBS (20) ROTATING THEM OUT	

STATUS	DESCRIPTION D1002302 Centris Hue Cross special form white/black - Disassembly instruction		DESIGN ID 05 D1002302	2024-04-29
			DOC 12NC	
NAME Tom Ob	LOCAL PART ID 096939	SH. 1	SH. 511	A3-L
CHECKED	DATE 2021-08-04		CONFIDENTIAL, PROPERTY OF: © 2021 Signify Holding	

©signify