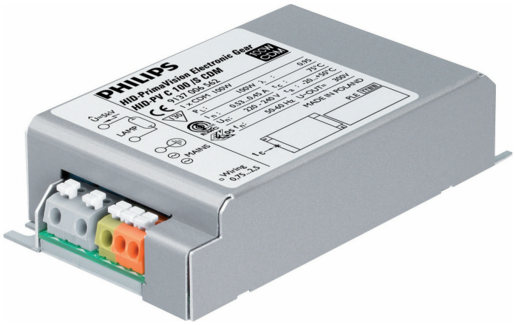

PrimaVision Compact for CDM

HID-PV C 35 /S CDM 220-240V 50/60Hz NG

High-quality, compact and lightweight HID electronic gear for optimal and reliable performance of 20, 35, 50 and 70 W CDM lamps

Product data

Operating and Electrical	
Input Voltage	220 to 240 V
Line Frequency	50 to 60 Hz
Input frequency	50 to 60 Hz
Inrush current width	0.25 ms
Inrush current peak (max.)	26 A
Number of products on MCB (16 A type B) (nom.)	24

Wiring	
Cable length from device to lamp	1.5 m
Connector type	Insert

Temperature	
T-case lifetime (nom.)	80 °C
T-Case maximum (max.)	80 °C

Mechanical and Housing	
Housing	/S
Net Weight (Piece)	0.216 kg

Approval and Application	
Safety standard	EN 61347-2-12
Environmental standard	ISO 14001
Approval marks	CE marking ENEC certificate
CE mark	Yes
Ambient temperature range	-20°C to 55°C

Product Data	
Order product name	HID-PV C 35 /S CDM 220-240V 50/60Hz NG
Full product name	HID-PV C 35 /S CDM 220-240V 50/60Hz NG
Full EOC	872790085962100
Order code	913700652766
Material no. (12 NC)	913700652766
Local order code	PVC035SCDM
Numerator – quantity per pack	1
EAN/UPC — Product/Case	8711500881687
Numerator – packs per outer box	12
EAN/UPC - Case	8727900859621

PrimaVision Compact for CDM

Dimensional drawing

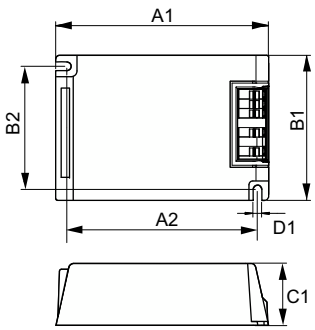

Product	D1	C1	A1	A2	B1	B2
HID-PV C 35 /S CDM 220-240V 50/60Hz NG	4.9 mm	32.2 mm	109.6 mm	98.5 mm	74.4 mm	63.7 mm

© 2023 Signify Holding All rights reserved. Signify does not give any representation or warranty as to the accuracy or completeness of the information included herein and shall not be liable for any action in reliance thereon. The information presented in this document is not intended as any commercial offer and does not form part of any quotation or contract, unless otherwise agreed by Signify. Philips and the Philips Shield Emblem are registered trademarks of Koninklijke Philips N.V.