MASTER MHN-FC

MASTER MHN-FC 1000W/740 230V XW

Compact quartz metal halide lamps with double pinch

Warnings and Safety

- Use only in totally enclosed luminaire, even during testing (IEC61167, IEC 62035, IEC60598)
- The luminaire must be able to contain hot lamp parts if the lamp ruptures
- A lamp breaking is extremely unlikely to have any impact on your health. If a lamp breaks, ventilate the room for 30 minutes and remove the parts, preferably with gloves. Put them in a sealed plastic bag and take it to your local waste facilities for recycling. Do not use a vacuum cleaner.

Product data

General Information	
Cap base	Double Ended
Operating position	P5 [Parallel +/-5D or Horizontal(HOR)]
Life to 50% failures (nom.)	12,000 h

Light Technical	
Colour Code	740 [CCT of 4000K]
Colour designation	White (WH)
Chromaticity Coordinate X (Nom)	374
Chromaticity Coordinate Y (Nom)	366
Correlated Colour Temperature (Nom)	4100 K
Luminous efficacy (rated) (nom.)	91 lm/W
Colour rendering index (CRI)	65
Arc Length O (Nom)	42.5 mm

Operating and Electrical	
Power Consumption	1,040.0 W
Voltage (nom.)	130 V

Controls and Dimming	
Dimmable	No

Mechanical and Housing	
Lamp Finish	Clear
Net Weight (Piece)	140.000 g

Approval and Application	
Mercury (Hg) content (nom.)	74 mg
Energy consumption kWh/1,000 hours	1,144 kWh
CE mark	Yes

Product Data	
Order product name	MASTER MHN-FC 1000W/740 230V XW
Full product name	MASTER MHN-FC 1000W/740 230V XW
Full EOC	871150021424900
Order code	928075705130
Material no. (12 NC)	928075705130
Local order code	MHNFC1000W740

MASTER MHN-FC

Numerator – quantity per pack	1
EAN/UPC — Product/Case	8718291548256
Numerator – packs per outer box	1

EAN/UPC - Case	8711500214249

Dimensional drawing

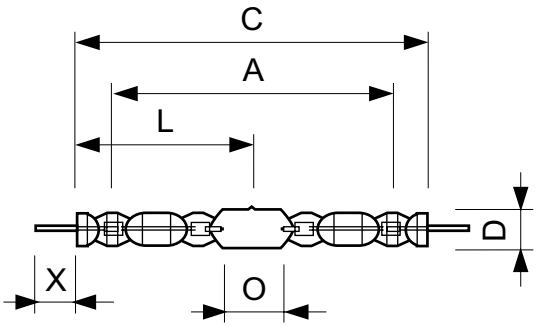

Product	D (max)	D	O	X	L	A	C (max)
MASTER MHN-FC 1000W/740 230V XW	33 mm	25.5 mm	42.5 mm	58 mm	144 mm	226 mm	290 mm

Photometric data

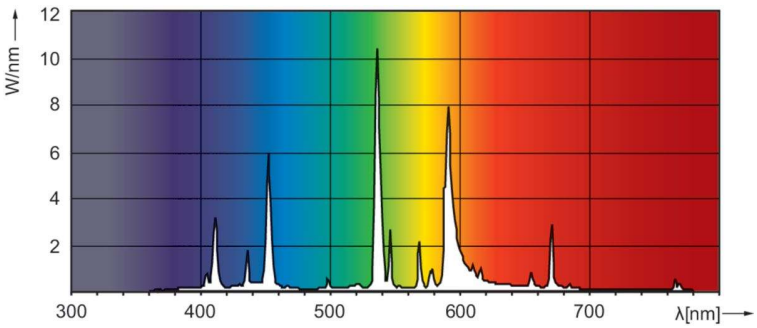

Spectral Power Distribution Colour - MASTER MHN-FC 1000W/740 230V XW

Lifetime

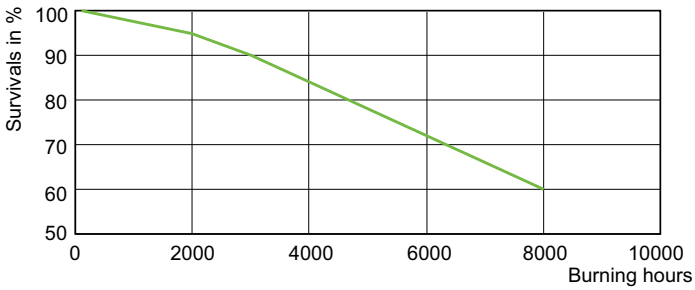

LDLE_MHN-FC_1000W_740_750-Life expectancy diagram

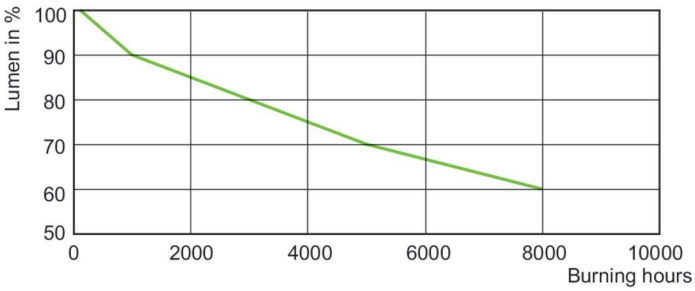

Lumen Maintenance Diagram - MASTER MHN-FC 1000W/740 230V XW

© 2026 Signify Holding All rights reserved. Signify does not give any representation or warranty as to the accuracy or completeness of the information included herein and shall not be liable for any action in reliance thereon. The information presented in this document is not intended as any commercial offer and does not form part of any quotation or contract, unless otherwise agreed by Signify. Philips and the Philips Shield Emblem are registered trademarks of Koninklijke Philips N.V.