MASTERColour CDM-T

MASTERColour CDM-T 250W/830 G12 1CT/12

Range of single-ended, compact, high-efficiency, discharge lamps with a stable colour over lifetime and a crisp, sparkling light

Warnings and Safety

- Use only in totally enclosed luminaire, even during testing (IEC61167, IEC 62035, IEC60598)
- The luminaire must be able to contain hot lamp parts if the lamp ruptures
- Control gear must include end-of-life protection (IEC61167, IEC 62035)
- Lamps may use electronic or electromagnetic control gear, except 35W/942 and 20W lamps, which must use electronic control gear.
- A lamp breaking is extremely unlikely to have any impact on your health. If a lamp breaks, ventilate the room for 30 minutes and remove the parts, preferably with gloves. Put them in a sealed plastic bag and take it to your local waste facilities for recycling. Do not use a vacuum cleaner.

Product data

General Information	
Cap base	G12
Operating position	UNIVERSAL [Any or Universal (U)]
Flux measurement reference	Sphere
Life to 50% failures (nom.)	15,000 h

Light Technical	
Colour Code	830 [CCT of 3000K]
Luminous Flux	27,750 lm
Colour designation	Warm White (WW)
Chromaticity Coordinate X (Nom)	0.434
Chromaticity Coordinate Y (Nom)	0.398
Correlated Colour Temperature (Nom)	3000 K
Luminous efficacy (rated) (nom.)	111 lm/W
Colour rendering index (CRI)	85
Arc Length O (Nom)	12.3 mm

Operating and Electrical	
Power Consumption	250.0 W
Voltage (nom.)	95 V

Controls and Dimming	
Dimmable	No

Mechanical and Housing	
Lamp Finish	Clear

MASTERColour CDM-T

Bulb shape	T24
Net Weight (Piece)	0.039 kg

Full product name	MASTERColour CDM-T 250W/830 G12 1CT/12
Full EOC	871150020801915
Order code	20801915
Material no. (12 NC)	928089805131
Local order code	250CDMT830
Numerator – quantity per pack	1
EAN/UPC — Product/Case	8711500208019
Numerator – packs per outer box	12
EAN/UPC - Case	8711500208026

Approval and Application

Energy Efficiency Class	F
Mercury (Hg) content (max.)	27.5 mg
Mercury (Hg) content (nom.)	27.5 mg
Energy consumption kWh/1,000 hours	250 kWh
EPREL Registration Number	473350

Product Data

Order product name	MASTERC CDM-T 250W/830 G12 1CT/12

Dimensional drawing

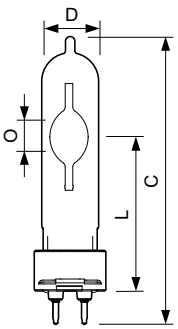

Product	D (max)	O	L (min)	L (max)	L	C (max)
MASTERC CDM-T 250W/830 G12 1CT/12	25 mm	12.3 mm	71.5 mm	73.5 mm	72.5 mm	135 mm

Photometric data

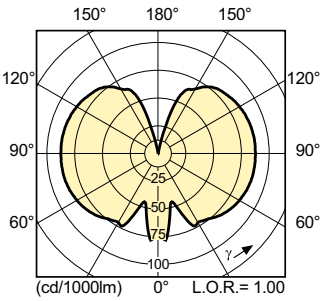

Light Distribution Diagram - MASTERC CDM-T 250W/830 G12 1CT/12

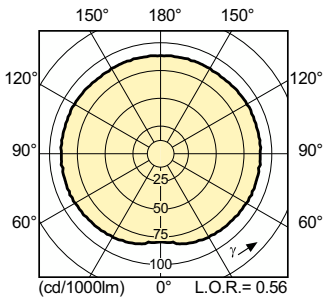

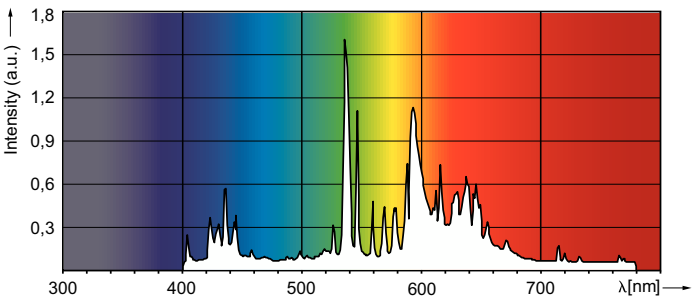

Spectral Power Distribution Colour - MASTERC CDM-T 250W/830 G12 1CT/12

MASTERColour CDM-T

Lifetime

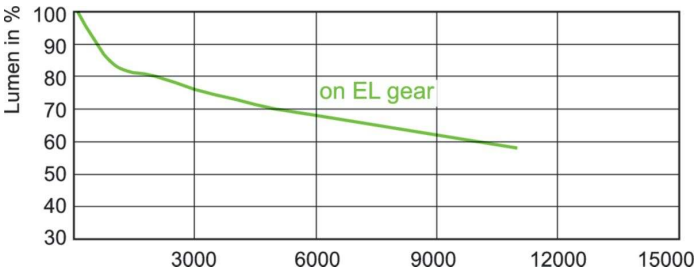

Lumen Maintenance Diagram - MASTERC CDM-T 250W/830 G12 1CT/12

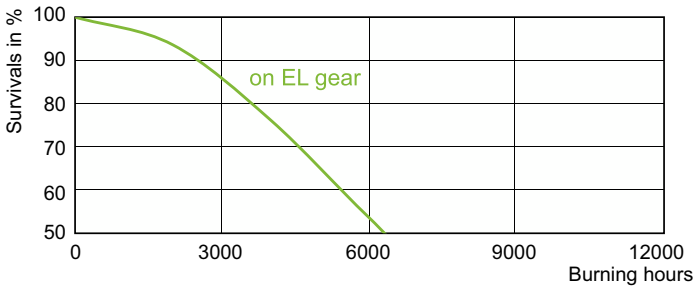

LDLE_CDM-T_250W_830-Life expectancy diagram

© 2023 Signify Holding All rights reserved. Signify does not give any representation or warranty as to the accuracy or completeness of the information included herein and shall not be liable for any action in reliance thereon. The information presented in this document is not intended as any commercial offer and does not form part of any quotation or contract, unless otherwise agreed by Signify. Philips and the Philips Shield Emblem are registered trademarks of Koninklijke Philips N.V.