ADVANCE by signify

LED Driver

Xitanium

XI180C090V285BSF2

Xitanium Long-lasting and low maintenance, LED-based light sources are an excellent solution for all lighting applications. For optimal performance, these solutions require reliable drivers matching the long lifetime of the LEDs. The Advance Xitanium LED outdoor driver portfolio offers a range of products specially designed to operate LED solutions in outdoor applications. These drivers are designed for hard-wired integration into outdoor luminaires for the most rugged applications. They operate to specification under wide temperature and electrical ranges to ensure reliability.

Specifications

Input Voltage (Vac)	Output Power (W)	Output Voltage (V)	Output Current (A)	Efficiency @ Max Load	Max Case Temp. (°C) Life/UL	Input Current (A)	Input Power (W)	THD @ Max Load (%)	Power Factor @ Max Load	Surge Protect (Combi Wave, KV)	Dimming	Dimming Range (%)	Min Dimming Current (mA)	Drive Type
120	180	100-285	0.1-0.9	91.5	85 / 90	1.67	200	<10	>0.95	6	0-10V	10-100	50	CC
277				94.0		0.72	200	<10	>0.95					

Enclosure

Item	In(mm)	Tolerance (mm)
Overall length (A1)	9.47(240.5)	+/-0.5
Mounting Length (A2)	8.91(226.2)	+/-0.5
Case Length (A3)	8.31(211)	+/-0.5
Case Width (B1)	2.31(58.6)	+/-0.5
Mounting Width (B2)	1.69(42.9)	+/-0.5
Case Height (C1)	1.48(37.6)	+/-0.5
Mounting Hole Diameter (D1)	0.23(5.9)	+/-0.5
Mounting Hole Diameter (D2)	0.31(7.9)	+/-0.5
Center of SimpleSet antenna (G1)	3.77(95.8)	+/-3

Mechanical Diagram

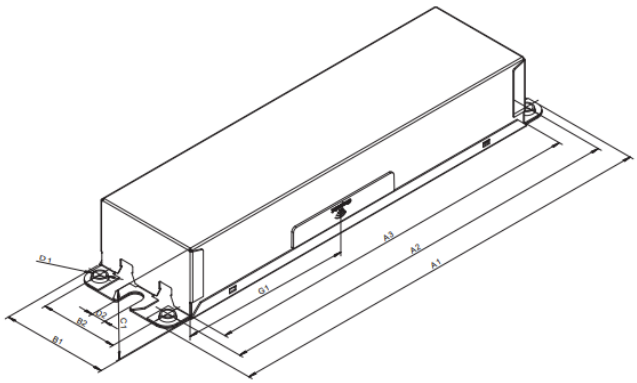

Wiring Diagram

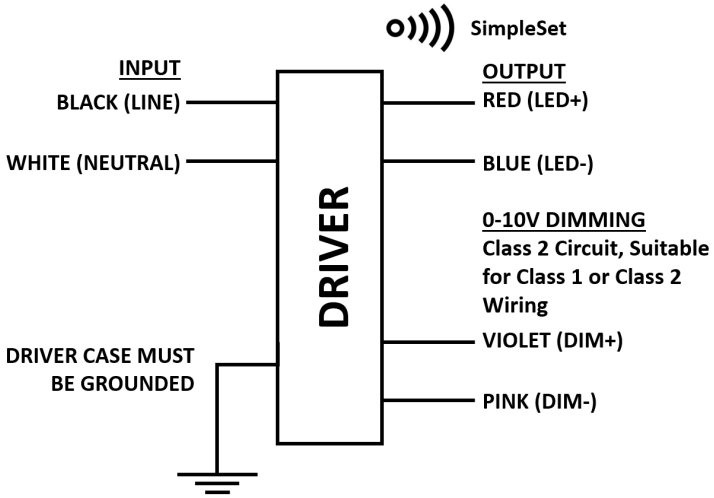

- Wire Length: 270 mm with 30 mm tolerance.
- Install in accordance with national and local electrical codes.
- The field-wiring leads or push-in terminals shall be fully enclosed.

RoHS COMPLIANT NOM c UL us LISTED

XI180C090V285BSF2

Features

- 50,000+ hour lifetime
- Excellent thermal performance
- 0-10V dimming suitable for UL Class 1 and Class 2 wiring

Benefits

- Enables long life luminaire designs
- Helps to maximize energy savings and allows application specific light levels
- Allows luminaire designs for ambient environments

Application

- Area
- Roadway
- Parking garages
- Floodlights
- High-bay, Mid-bay, Low-bay fixtures

Logistical data

Specification item	Value
Product name	XI180C090V285BSF2
EOC	XI180C090V285BSF2
Logistic code 12NC	9290 017 82713
Product code	XI180C090V285BSF2M
Pieces per box	10
Weight	950 gram

All the specifications are typical and at $T_{ambient}$ = 25°C unless specified otherwise

Electrical input data

Specification item	Value	Value	Unit	Condition
Rated input voltage range	108...305		V_{ac}	Performance range
Rated input voltage	120	277	V_{ac}	
Rated input frequency	50...60	50...60	Hz	Performance range
Rated input current	1.67	0.72	A	@ rated output power @ rated input voltage
Rated input power	200.0	200.0	W	@ rated output power @ rated input voltage
Efficiency	91.5	94.0	%	@ rated output power @ rated input voltage
Rated input voltage DC	125...250		V_{dc}	An additional EMC filter may be necessary to comply with FCC Part 15 class A limit.

Electrical output data

Specification item	Value	Unit	Condition
Output voltage	100...285	V_{dc}	
Output voltage max.	385	V	Open Circuit Voltage
Output current	100...900	mA	
Output current min programmable	100	mA	
Min output current	50	mA	
Output current tolerance ±	5	%	within performance window
Output current ripple LF	≤ 15	%	@ max Iout
Output current ripple LF	≤ 4	%	@ frequency range 60Hz-3KHz
Output P_{st}^{LM}	≤ 1.0		Flicker in compliance per NEMA 77
Output SVM	≤ 1.0		Flicker in compliance per NEMA 77
Output power	5.0...180.0	W	
Minimum performance output power	60	W	Power factor > 0.9 and THD < 20%

XI180C090V285BSF2

Control interfaces

Specification item	Value	Unit	Condition
Control method	0-10V		
Dimming range	10...100	%	Default range
Dimming Source Current	0.15	mA	
Maximum Dimming Voltage	12	V	
Dimming Leakage Current	0.01	mA	Max number of driver in parallel, refer to Design-in Guide

Isolation

U = Max. input voltage

Isolation per UL-8750	Input	Output	0-10V	Enclosure
Input	-	2U + 1kVac	2U + 1kVac	2U + 1kVac
Output	2U + 1kVac	-	2U + 1kVac	500Vac
0-10V	2U + 1kVac	2U + 1kVac	-	2U + 1kVac
Enclosure	2U + 1kVac	500Vac	2U + 1kVac	-

Operational temperatures and humidity

Specification item	Value	Unit	Condition
Ambient temperature	-40...+55	°C	Higher ambient temperature allowed as long as Tcase-max is not exceeded
Tcase-UL	90	°C	Max. temperature measured at T_{case}-point
Tcase-life	85	°C	C10 = 50000 hours measured at T_c-point

Lifetime

Specification item	Value	Unit	Condition
Driver lifetime	50,000	hours	Measured temperature at Tcase-point is Tcase-life. Maximum failures = 10%

XI180C090V285BSF2

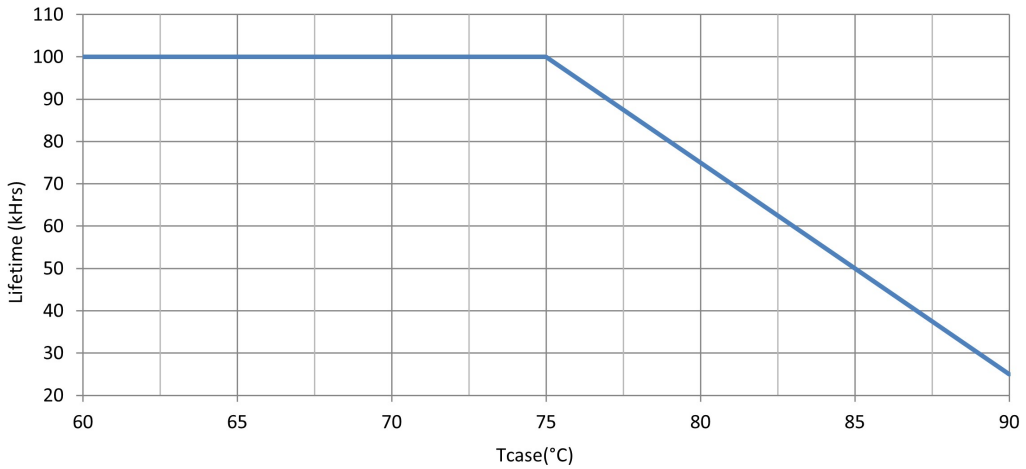

Maximum failures = 10%

Programmable features

Specification item	Available	Default setting	Condition
Set Adjustable Output Current (AOC)	NFC, SimpleSet	700 mA	
Driver Temperature Limit (DTL)	Yes		
Adjustable Light Output (ALO)	Yes		
Constant Light Output (CLO)	Yes		
0-10V	Yes		
Dynadimmer	Yes		
Min Dim Level (%)	Yes		
OEM Write Protection (OWP)	Yes		

Non-programmable features

Specification item	Value		Condition
Open load protection	Yes		Automatic recovering
Short circuit protection	Yes		Automatic recovering
Over power protection	Yes		Automatic recovering
Overtemperature protection	Yes		Automatic recovering

XI180C090V285BSF2

Inrush current

Specification item	Value	Unit	Condition
Inrush current	69	A	Input voltage 120V
Inrush current	151	A	Input voltage 277V
Inrush peak width	160	µs	Input voltage 120V, measured at 10% height
Inrush peak width	143	µs	Input voltage 277V, measured at 10% height

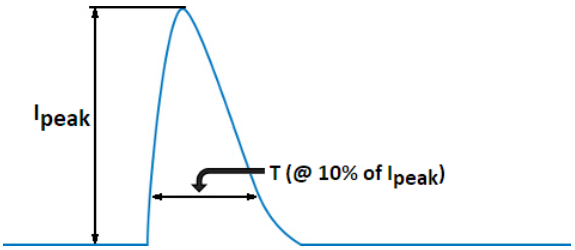

Surge immunity

Specification item	Value	Unit	Condition
Mains surge immunity (diff. mode)	6	kV	ANSI Surge Type 1.2/50us Combination Wave (w/t 2 ohm)
Mains surge immunity (comm. mode)	6	kV	ANSI Surge Type 1.2/50us Combination Wave (w/t 2 ohm)

Approbation

Specification item	Value
Approval Marks / Agency Approbations	NOM / RoHS / UL Class P / UL Listed US & Can
EMI standards	FCC Title 47 Part 15; Class A
Environmental protection rating	UL damp & dry, Type HL
Audible Noise	<24dB Class A

XI180C090V285BSF2

Graphs

Operating window

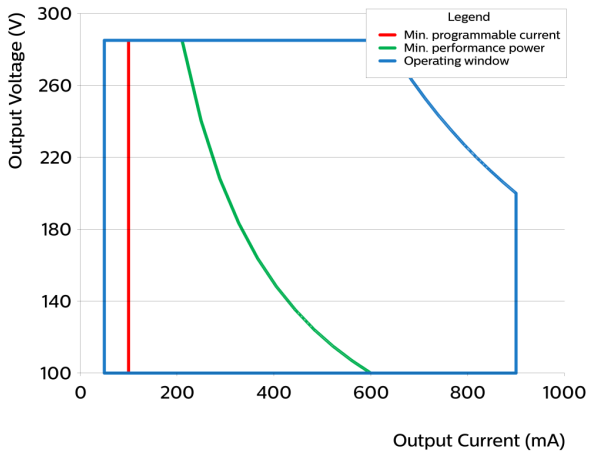

- Factory default output current is 0.7A.
- To get a 100% to 10% dimming range, the output current setting through AOC should be ≥ 0.5A.
- Factory default minimum dimming is 10%. This can be adjusted between 10% and 100% using Advance MultiOne.

Over Temperature Protection

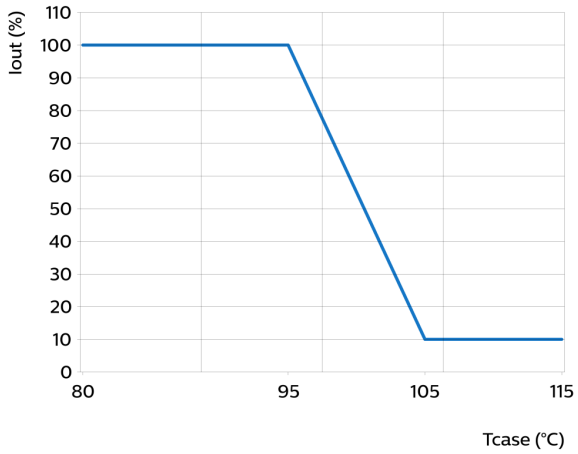

Adjustable via DTL with MultiOne Programming.

XI180C090V285BSF2

Power factor versus output power

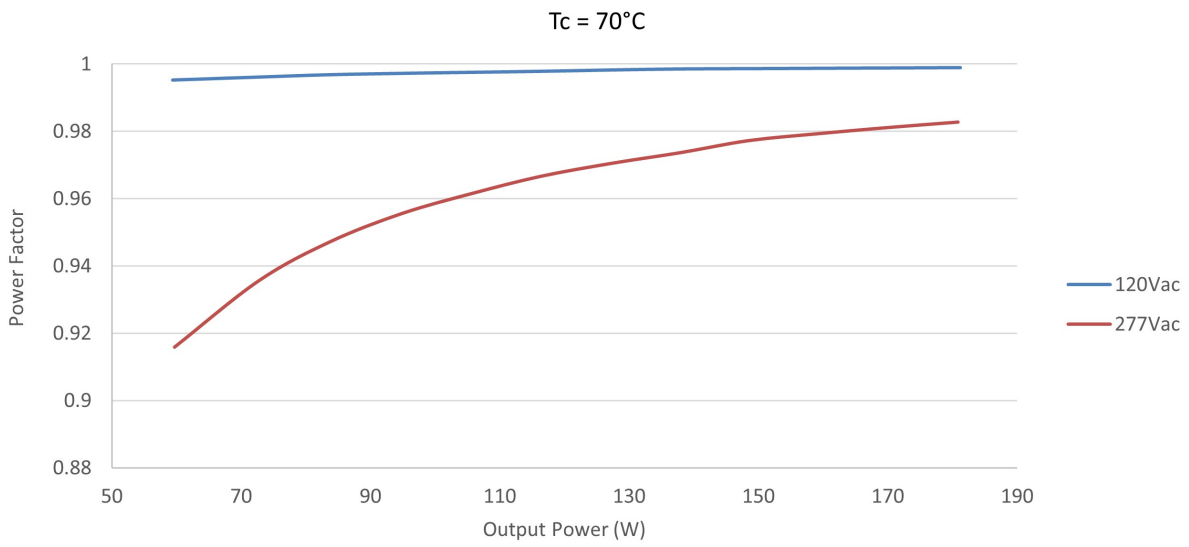

THD versus output power

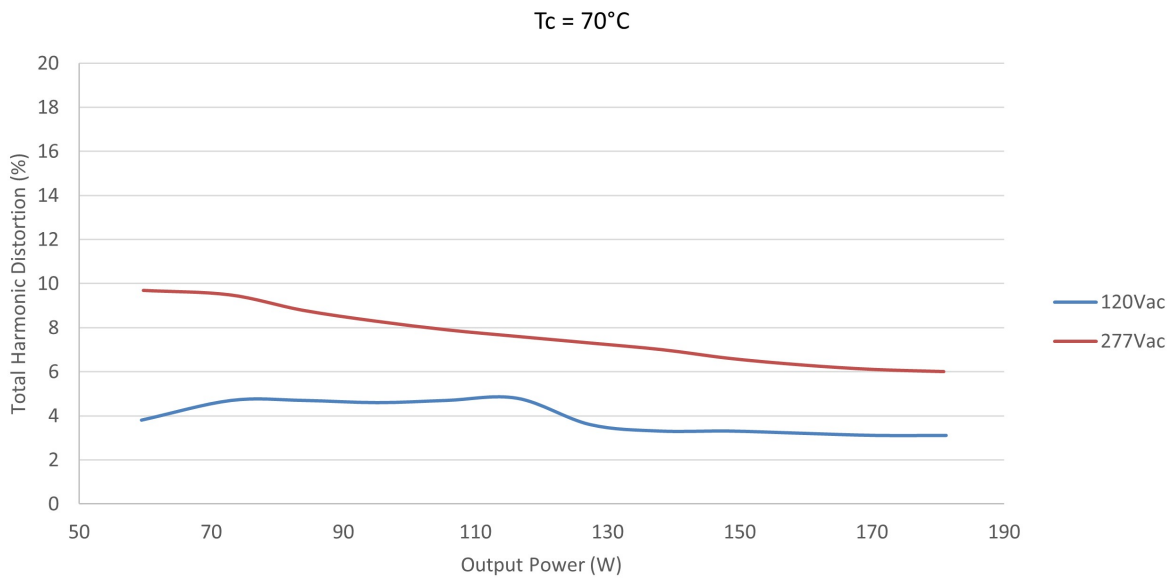

XI180C090V285BSF2

I_out as function of 0-10V interface

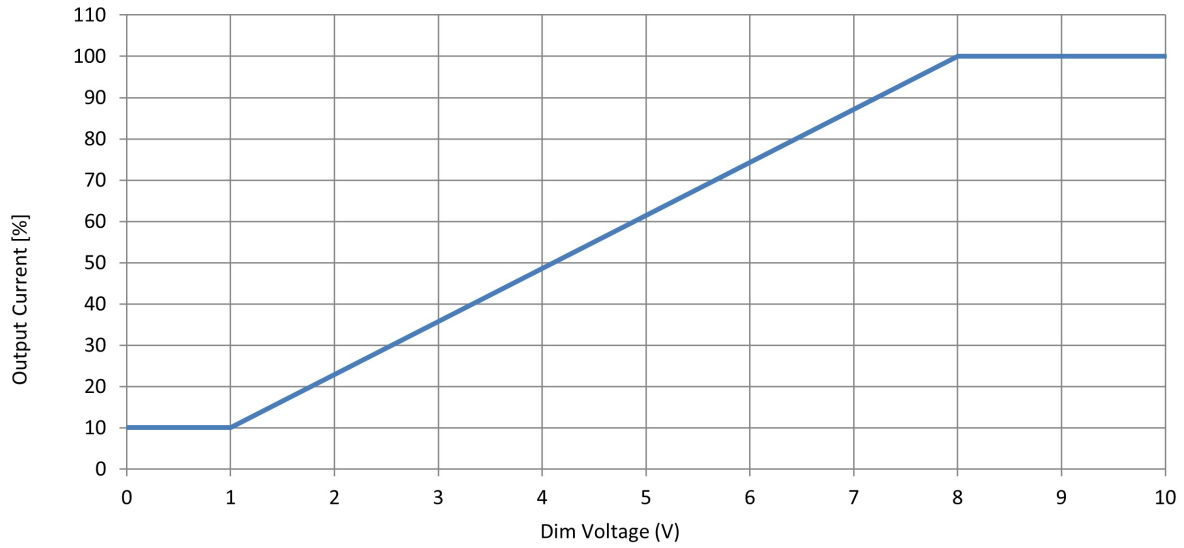

Efficiency as function of V_{out}

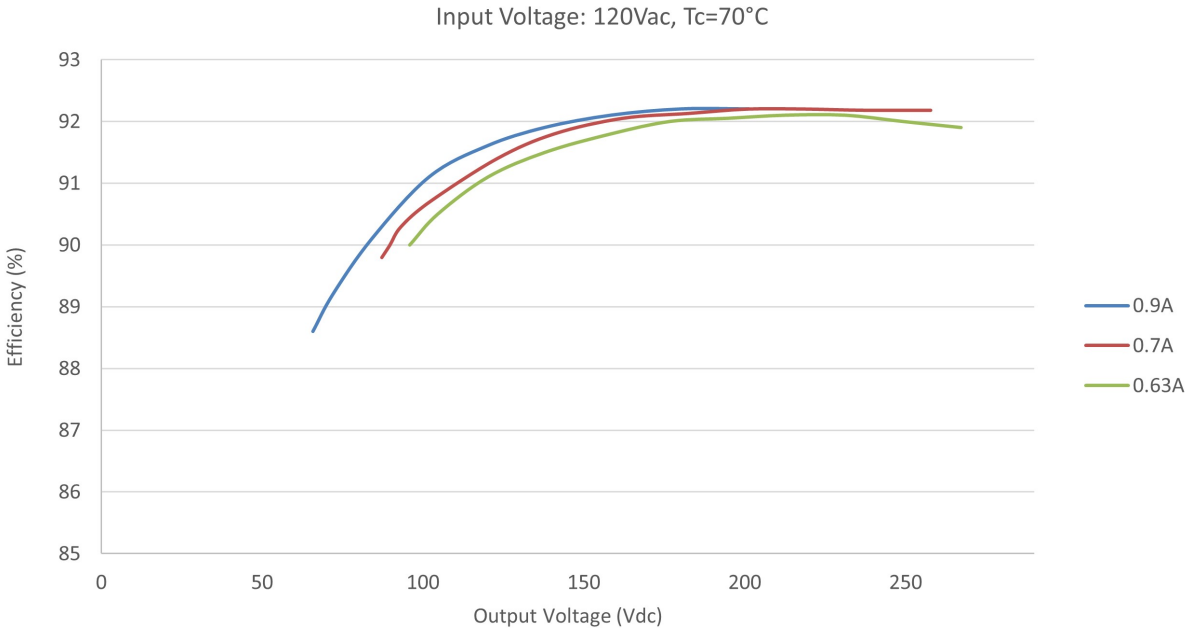

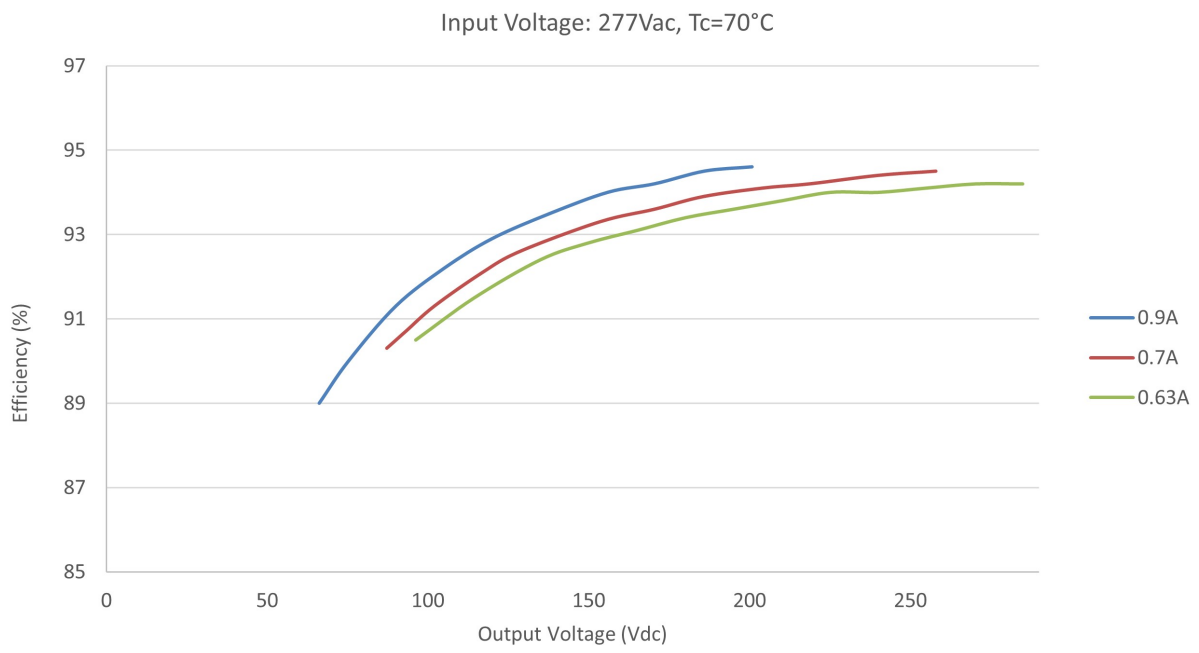

Appendix

Approved Dimmer List

Manufacturer	Manufacturer Part Number
Lutron	Visit www.lutron.com/ advance for a list of dimmers (Mark VII) that will work with this driver
Leviton	IllumaTech IP7 series
Philips	Sunrise - SR1200ZTUNV

© 2025 Signify Holding. All rights reserved. The information provided herein is subject to change, without notice. Signify does not give any representation or warranty as to the accuracy or completeness of the information included herein and shall not be liable for any action in reliance thereon. The information presented in this document is not intended as any commercial offer and does not form part of any quotation or contract, unless otherwise agreed by Signify. All trademarks are owned by Signify Holding or their respective owners.

Signify North America Corporation
400 Crossing Blvd, Suite 600,
Bridgewater, NJ 08807
Telephone 855-486-2216

Signify Canada Ltd.
281 Hillmount Road,
Markham, ON
Canada L6C 2S3
Telephone 800-668-9008

www.signify.com/advance