Xitanium

Datasheet

Xitanium track adaptor drivers (3C)

Xitanium 20W/a 0.15-0.5A 42V 3CG 230V
9290 021 29506

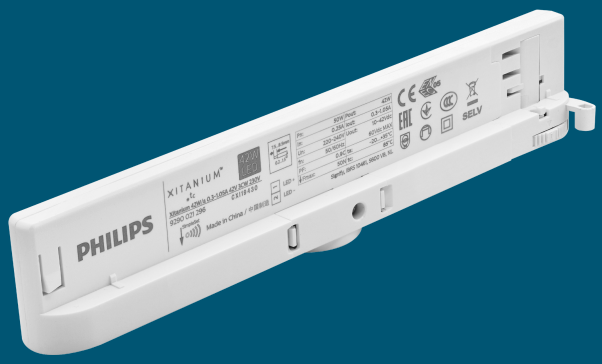

Affordable and reliable LED Drivers

Affordable LED driver range offering Philips reliability. The Xitanium track driver range is compatible with COB and mid-power LEDs from any LED manufacturer.

Benefits

- Driver design based on Philips experience and knowledge of conventional fluorescent and HID technologies
- Various power ratings matching common lumen packages/applications
- Track adaptor housing design for compact track luminaire designs

Features

- Compact size
- Specific, optimized dual-output current choice
- Long lifetime
- Low output current ripple, low input current THD
- Suitable for 3-phase track systems
- Available in white, black and grey housing color

Application

- Public buildings (airports, cinemas, theaters, exhibition halls)
- Retail (supermarkets, shops)
- Offices

Logistical data

Specification item	Value
Product name	Xitanium 20W/a 0.15-0.5A 42V 3CG 230V
EOC	871869973470100
Logistic code 12NC	9290 021 29506
EAN1 (GTIN)	8718699734701
EAN3 (box)	8718699734718
Pieces per box	40
Weight	108 gram

Electrical input data

Specification item	Value	Unit	Condition
Rated input voltage range	220...240	V_{ac}	Performance range
Rated input voltage	230	V_{ac}	
Rated input frequency	50...60	Hz	Performance range
Rated input current	0.11	A	@ full output power @ rated input voltage
Max. input current	0.12	A	@ rated output power @ minimum performance input voltage
Rated input power	22.0	W	@ rated output power @ rated input voltage
Power factor performance range	≥ 0.90 C		@ full output power @ rated input voltage@ rated output power @ rated input voltage
Total harmonic distortion	20	%	@ rated output power @ rated input voltage
Efficiency	85.1	%	@ rated input voltage @ rated output power @ max. Iout
Input voltage AC	198...264	V_{ac}	Safety operational range
Input frequency AC	45...66	Hz	Safety operational range
Isolation input to output	SELV		

Electrical output data

Specification item	Value	Unit	Condition
Regulation method	Constant Current		
Output voltage	10...42	V_{dc}	
Output voltage max.	60	V	Maximum output voltage (rms)
Output current	150...500	mA	
Output current tolerance ±	5	%	@full load
Output current ripple LF	≤ 4	%	Ripple = peak / average, < 3kHz
Output P_{st}^{LM}	≤ 0.3		
Output SVM	≤ 0.3		
Output power	5.0...20.0	W	

Control interfaces

Specification item	Value	Unit	Condition
Control method	Fixed		Set output current via SimpleSet (AOC)

Wiring and Connections

Specification item	Value	Unit	Type
Output wire cross-section	0.5...1.5 / 20...16	mm^2 / AWG	solid / stranded wire
Output wire strip length	7.5...8.5	mm	
Maximum cable length	0.3	m	Total length of wiring including LED module, one way

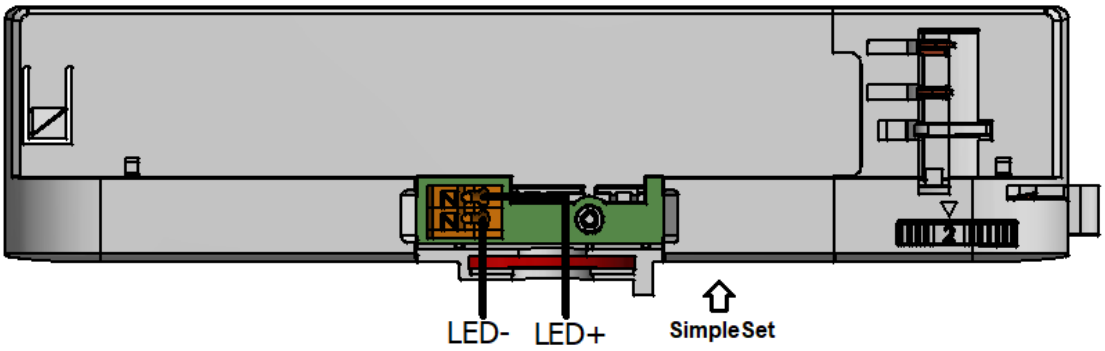

Isolation

Insulation per IEC61347-1	Input	Output
Input	-	SELV
Output	SELV	-

Dimensions and weight

Specification item	Value	Unit	Tolerance (mm)
Length (A1)	171	mm	
Mounting hole distance (A2)	88	mm	
Width (B1)	31	mm	
Width (B2)	13.2	mm	
Height (C1)	43.8	mm	
Height (C2)	13.7	mm	
Mounting hole diameter (D1)	27.3	mm	
Mounting hole diameter (D2)	24.4	mm	
Weight	108	gram	
Housing color	Grey (RAL 7040)		

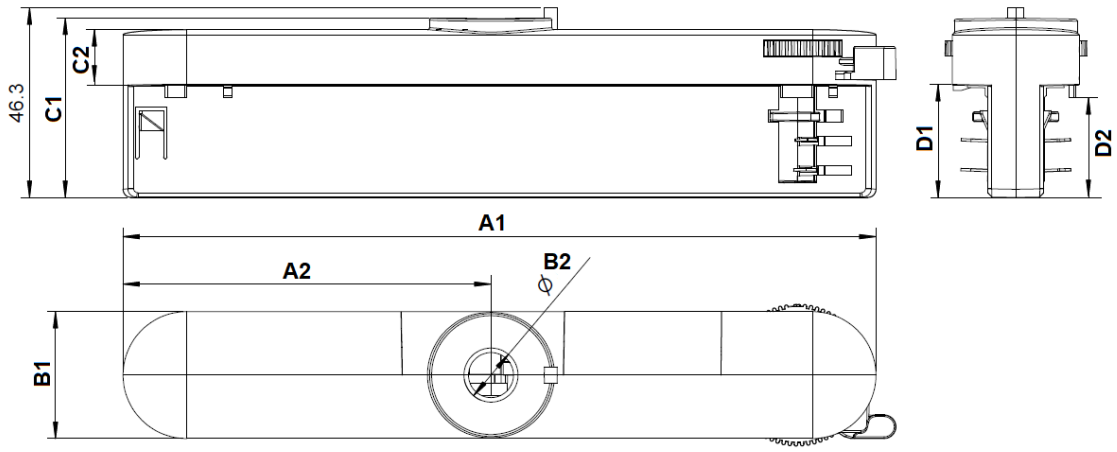

Operational temperatures and humidity

Specification item	Value	Unit	Condition
Ambient temperature	-20...+35	°C	Higher ambient temperature allowed as long as Tcase-max is not exceeded
Tcase-max	85	°C	Maximum temperature measured at T_{case}-point
Tcase-life	85	°C	Measured at T_{case}-point
Maximum housing temperature	130	°C	In case of a failure, inherent by design
Relative humidity	10...90	%	Non-condensing

Lifetime

Specification item	Value	Unit	Condition
Driver lifetime	50,000	hours	Measured temperature at Tcase-point is Tcase-life. Maximum failures = 10%

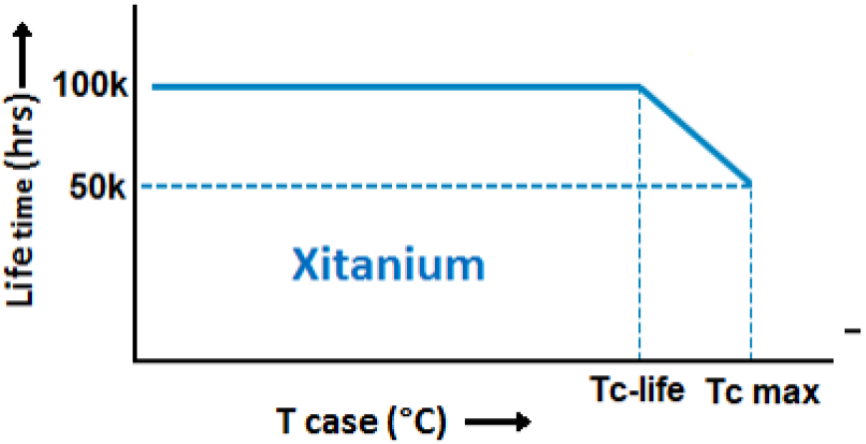

Maximum failures = 10%

Temperature [°C]	Lifetime	Unit	Condition
85	50000	hr	Temperature measured @Tc point
80	>50000	hr	
75	>50000	hr	

Storage temperature and humidity

Specification item	Value	Unit	Condition
Ambient temperature	-25...+85	°C	
Relative humidity	5...95	%	Non-condensing

Programmable features

Specification item	Available	Default setting	Condition
Set Adjustable Output Current (AOC)	SimpleSet	150 mA	
OEM Write Protection (OWP)	Yes	OFF	
Luminaire Info (DALI part 251)	Yes		

Non-programmable features

Specification item	Value	Condition
Open load protection	Yes	Automatic recovering
Short circuit protection	Yes	Automatic recovering
Over power protection	Yes	Automatic recovering
Hot wiring	No	
Suitable for fixtures with protection class	I	per IEC60598

Inrush current

Specification item	Value	Unit	Condition
Inrush current	8	A	Input voltage 230V
Inrush peak width	150	µs	Input voltage 230V, measured at 50% height
Drivers / MCB 16A type B @230V AC	≤ 72	pcs	Input voltage 230V

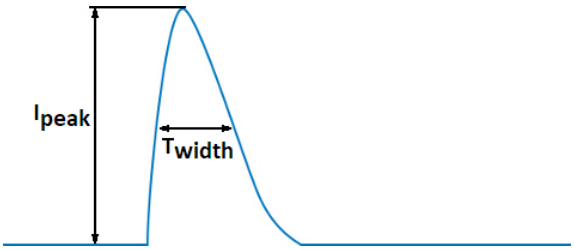

Please refer to the driver design in guide if you use other MCB-types.

If several mini circuit breakers are used directly side-by-side (without distance pieces a correction factor of 80% has to be applied to the rated current

Driver touch current / protective conductor current / earth leakage current

Specification item	Value	Unit	Condition
Typical Touch Current (ins. Class II)	0.7	mA peak	Acc. IEC61347-1. LED module contribution not included

Surge immunity

Specification item	Value	Unit	Condition
Mains surge immunity (diff. mode)	1	kV	Acc. IEC61000-4-5. 2 Ohm, 1.2/50us, 8/20us
Mains surge immunity (comm. mode)	2	kV	Acc. IEC61000-4-5. 12 Ohm, 1.2/50us, 8/20us

Application Info (Approbation)

Specification item	Value
Approval marks and Certifications	CE / CQC / EAC / ENEC / RCM / SELV / UA
Ingress Protection classification (IP)	20
Application	Indoor Point
Mounting Type	Track mounting

Graphs

Operating window

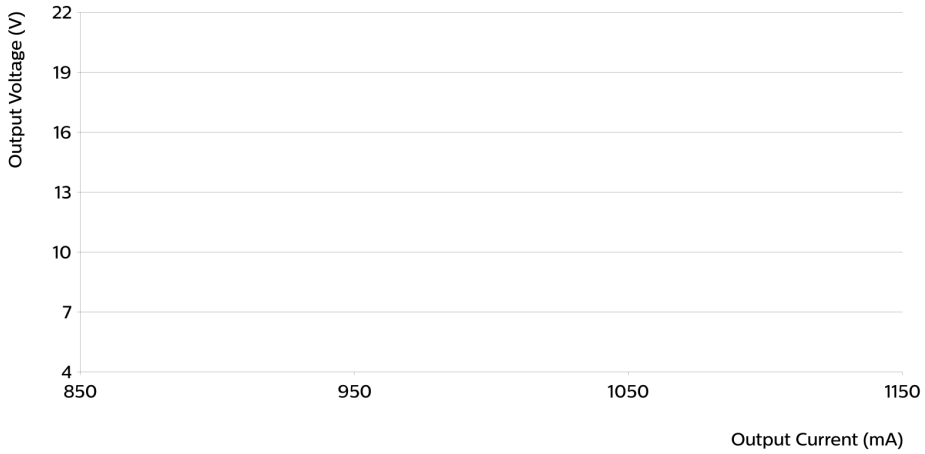

Type	Output current (mA)	Min. output voltage (V)	Max. output voltage (V)	Max. output power (W)
Xitanium 20W/a 0.15-0.5A 42V 3CG 230V	150	33	42	6.3
Xitanium 20W/a 0.15-0.5A 42V 3CG 230V	200	25	42	8.4
Xitanium 20W/a 0.15-0.5A 42V 3CG 230V	250	20	42	10.5
Xitanium 20W/a 0.15-0.5A 42V 3CG 230V	300	16	42	12.6
Xitanium 20W/a 0.15-0.5A 42V 3CG 230V	350	14	42	14.7
Xitanium 20W/a 0.15-0.5A 42V 3CG 230V	400	12	42	16.8
Xitanium 20W/a 0.15-0.5A 42V 3CG 230V	450	11	42	18.9
Xitanium 20W/a 0.15-0.5A 42V 3CG 230V	500	10	40	20

Power factor versus output power

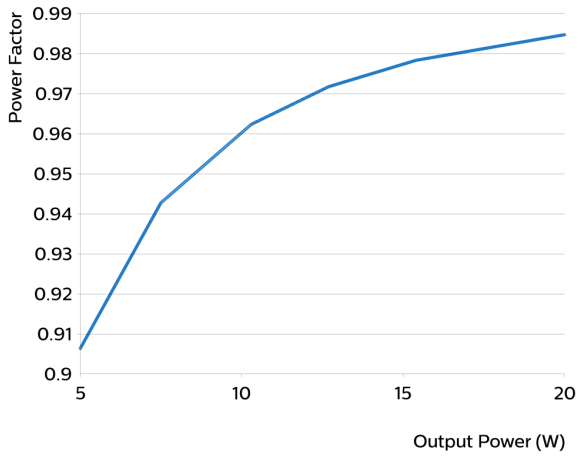

Efficiency versus output power

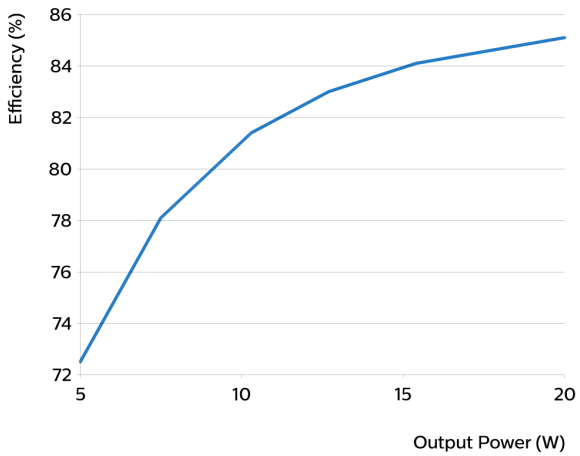

THD versus output power

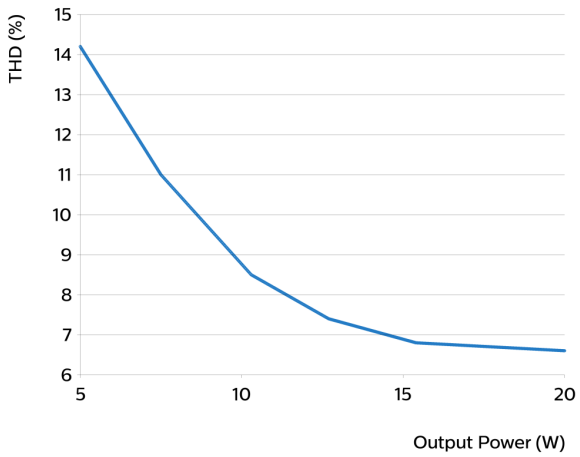

Notes

The adapter is compatible with Global Trac Pro, Stucchi OneTrack 3 Circuit tracks.

© 2026 Signify Holding. All rights reserved. The information provided herein is subject to change, without notice. Signify does not give any representation or warranty as to the accuracy or completeness of the information included herein and shall not be liable for any action in reliance thereon. The information presented in this document is not intended as any commercial offer and does not form part of any quotation or contract, unless otherwise agreed by Signify. All trademarks are owned by Signify Holding or their respective owners.