MASTER VALUE LED spot LV

MAS LEDspotLV DimTone 7.5-50W MR16 36D

MASTER Value, LEDspot, MR16, 50 W, GU5.3, 2200 K, 2700 K, 621 lm, CRI 90, 25000 h, Glass

Philips MASTER VALUE MR16 is the series of Low Voltage (12 VAC) Halogen MR16 replacements. Not only does it employ Philips' patented solution to guarantee the broadest possible compatibility with standard 12 V Halogen electronic transformers, it also delivers beam intensity which is equivalent to the 50 W Philips Halogen MR16 lamps. The form-factor of Philips MASTER Value LED MR16 guarantees a 100% form on the back-side of the lamp (exact fit with Halogen lamps.)

Warnings and Safety

- Operating temperature range is between -20° C and 45° C ambient
- Only to apply in dry or damp locations and most of open fixtures with lamp-holders that offer sufficient space (10 mm free air space)
- Not intended for use with emergency light fixtures or exit lights

Product data

General Information	
Cap base	GU5.3
Nominal lifetime	25,000 h
Switching Cycle	50,000
Lighting Technology	LEDspot
Flux measurement reference	Narrow Cone
Warranty period	5 years

Light Technical	
Colour Code	922-927 [CCT of 2200K-2700K]
Beam angle (nom.)	36 degree(s)
Luminous Flux	621 lm
Luminous intensity (nom.)	1,100 cd
Colour designation	Warm Glow (WG)
Correlated Colour Temperature (Nom)	2200 2700 K
Luminous efficacy (rated) (nom.)	82.00 lm/W
Colour consistency	<6

MASTER VALUE LED spot LV

Colour rendering index (CRI)	90
LLMF at end of nominal lifetime (nom.)	70 %
Luminous flux in 90° cone (rated)	621 lm
Photobiological safety according to EN 62471	RG1

Operating and Electrical

Line Frequency	- Hz
Input frequency	- Hz
Power Consumption	7.5 W
Lamp current (nom.)	670 mA
Wattage equivalent	50 W
Starting time (nom.)	0.5 s
Warm-up time to 60% light	0.5 s
Power Factor (Fraction)	0.7
Voltage (nom.)	ac electronic 12 V

Temperature

T-Case maximum (nom.)	95 °C

Controls and Dimming

Dimmable	Only with specific dimmers

Mechanical and Housing

Lamp Finish	Clear
Bulb material	Glass
Bulb shape	MR16
Net Weight (Piece)	0.045 kg

Approval and Application

Energy Efficiency Class	F
Suitable for accent lighting	Yes
Energy consumption kWh/1,000 hours	8 kWh
EPREL Registration Number	453186
CE mark	Yes
EU RoHS compliant	Yes
EyeComfort	Yes
Ambient temperature range	-20 to +40 °C

Application Conditions

Can it be used in closed luminaires	No
Wireless Technology	Not applicable

Product Data

Order product name	MAS LEDspotLV DimTone 7.5-50W MR16 36D
Full product name	MAS LEDspotLV DimTone 7.5-50W MR16 36D
Full EOC	871951430744500
Order code	929002493802
Material no. (12 NC)	929002493802
Numerator – quantity per pack	1
EAN/UPC — Product/Case	8719514307445
Numerator – packs per outer box	10
EAN/UPC - Case	8719514307452

Dimensional drawing

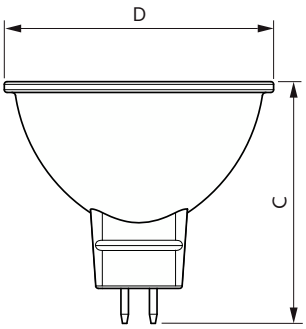

Product	D	C
MAS LEDspotLV DimTone 7.5-50W MR16 36D	50.5 mm	45.5 mm

MASTER VALUE LED spot LV

Photometric data

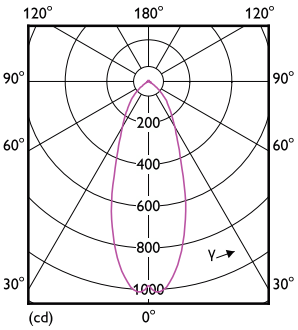

Light Distribution Diagram - MAS LEDspotLV DimTone 7.5-50W MR16 36D

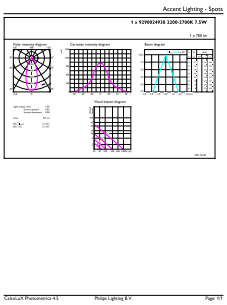

Accent Lighting Spots - MAS LEDspotLV DimTone 7.5-50W MR16 36D

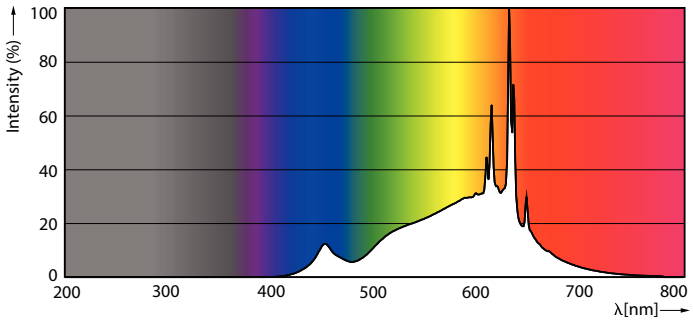

Spectral Power Distribution Colour - MAS LEDspotLV DimTone 7.5-50W MR16 36D

Lifetime

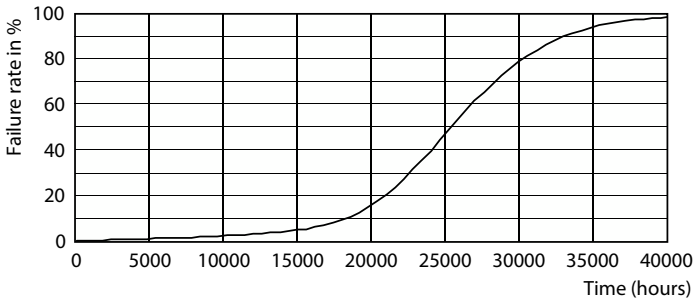

Life Expectancy Diagram

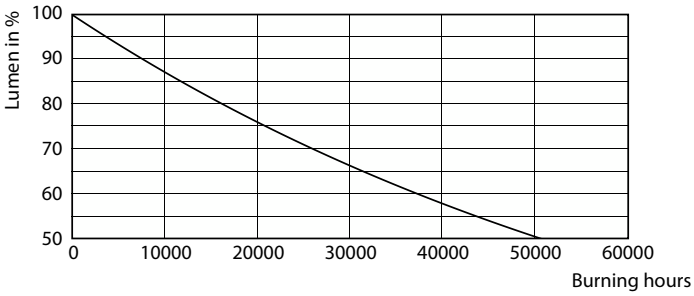

Lumen Maintenance Diagram - MAS LEDspotLV DimTone 7.5-50W MR16 36D

© 2023 Signify Holding All rights reserved. Signify does not give any representation or warranty as to the accuracy or completeness of the information included herein and shall not be liable for any action in reliance thereon. The information presented in this document is not intended as any commercial offer and does not form part of any quotation or contract, unless otherwise agreed by Signify. Philips and the Philips Shield Emblem are registered trademarks of Koninklijke Philips N.V.