xitanium

Datasheet

Xitanium LED Xtreme high-power drivers

Xi 1800W 220-400V DMX
9290 029 52306

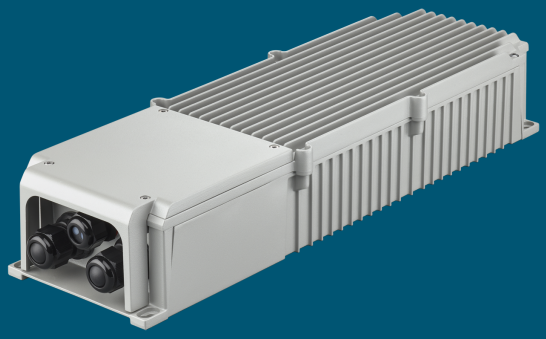

Philips Xitanium High Power 1800W driver

Capitalizing on Philips Lighting's unique experience in sports lighting, the Philips 1800W driver is designed to cater to the high-end broadcasting needs and support the best quality of light that make it an ideal choice for sports events, concerts, and other outdoor activities. The Digital Multiplexing feature of the driver enables dynamic lighting shows, making it perfect where lighting plays a crucial role in creating an atmosphere. Designed with advanced and robust technology, this driver provides unparalleled performance and efficiency, while ensuring that your lighting system will deliver the best lighting experience. Whether you're looking for high reliability or ease of installation, the Philips Xitanium High Power 1800W driver is the perfect choice.

Benefits

- Supporting best quality of light for high-end broadcasting
- No afterglow
- Unique spectator experience – Digital Multiplexing enabling dynamic lighting shows
- Easy installation and integration thanks to low weight, space available for wiring, long cable distance, resistance to coastal environment

Application

- High-end sport lighting
- Arenas

Features

- Integration with 3rd party controllers DMX/RDM up to 33 fps
- Flicker free factor < 1% - for super slow motion.
- 3 x 600W independent channels with configurable operating windows (AOC)
- Wireless programming with SimpleSet
- Up to 97% efficiency
- 10kV surge immunity (CM/DM), residual output surge voltage < 2kV
- Dimming range 5-100%
- Up to 200 meters distance between driver and LED
- IP66, IK08 housing supporting 1440 hours SST(tests are ongoing)
- Weight of 5.2 kg

Logistical data

Specification item	Value
Product name	Xi 1800W 220-400V DMX
EOC	872016919009200
Logistic code 12NC	9290 029 52306
EAN1 (GTIN)	8720169190092
Pieces per box	1
Weight	5200 gram

Electrical input data

Specification item	Value	Value	Unit	Condition
Rated input voltage range	212...254	368...424	V_{ac}	Performance range
Rated input frequency	47...63	47...63	Hz	Performance range
Rated input current	8.2	4.6	A	@ rated output power @ rated input voltage
Max. input current	8.5	4.5	A	@ rated output power @ minimum performance input voltage
Rated input power	1,875.0	1,855.0	W	@ rated output power @ rated input voltage
Power factor performance range	0.95...0.89	0.95...0.89		@ rated output power @ rated input voltage
Power factor	0.99	0.99		@ maximum output power @ rated input voltage
Total harmonic distortion	20	20	%	@ rated output power @ rated input voltage
Efficiency	≤ 96.0	≤ 97.0	%	@ rated output power @ rated input voltage @ max. Uout
Input voltage AC	198...457	198...457	V_{ac}	Operational range.
Input frequency AC	47.5...63	47.5...63	Hz	Operational range
Standby Power (no load)	0.8	0.8	W	
Isolation input to output	No			

Electrical output data

Specification item	Value	Unit	Condition
Regulation method	Constant Current		
Output voltage	250...500	V_{dc}	
Output voltage max.	520	V	Maximum voltage at open load
Output current	100...2100	mA	
Output current min programmable	700	mA	
Output current tolerance ±	5	%	@full load
Output current ripple LF	≤ 1	%	Ripple = peak / average, < 3kHz
Output current ripple HF	≤ 10	%	
Output P_{st}^{LM}	≤ 0.4		In entire operating window
Output SVM	≤ 0.3		In entire operating window
Output power	75.0...600.0	W	3 channels
Minimum performance output power	300	W	Power factor > 0.9 and THD < 20%
Number of output channels	3		

Control interfaces

Specification item	Value	Unit	Condition
Control method	DMX		Output current amplitude dimming. Please refer to design-in guide at www.philips.com/oem for more controllability details.
Dimming range	5...100	%	min Iout 100mA
Isolation controls input to output	Reinforced		acc. IEC61347-1

Wiring and Connections

Specification item	Value	Unit	Type
Input wire cross-section	1.5...4 / 16...12	mm² / AWG	solid / stranded wire
Input wire strip length	10...12	mm	
Output wire cross-section	1.5...4 / 16...12	mm² / AWG	solid / stranded wire
Output wire strip length	10...12	mm	
Maximum cable length	200	m	CISPR15: between driver and LED module
Maximum NTC output cable length	200	m	

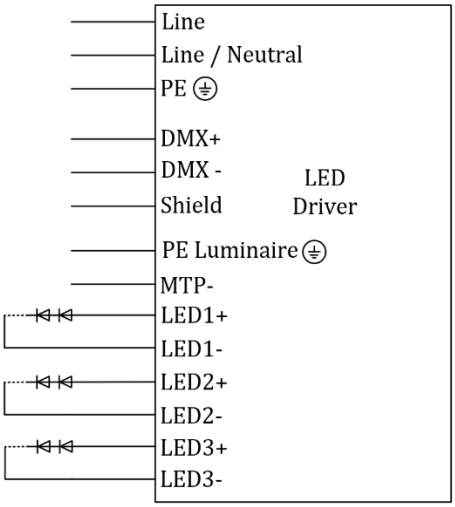

Isolation

Insulation per IEC61347-1	Mains	Output	DMX
Mains	-	No	Reinforced
Output	No	-	Reinforced
DMX	Reinforced	Reinforced	-

Dimensions and weight

Specification item	Value	Unit	Tolerance (mm)
Length (A1)	500	mm	± 1
Width (B1)	145	mm	± 1
Height (C1)	90.5	mm	± 1
Mounting hole diameter (D1)	6.5	mm	± 0.2
Weight	5200	gram	

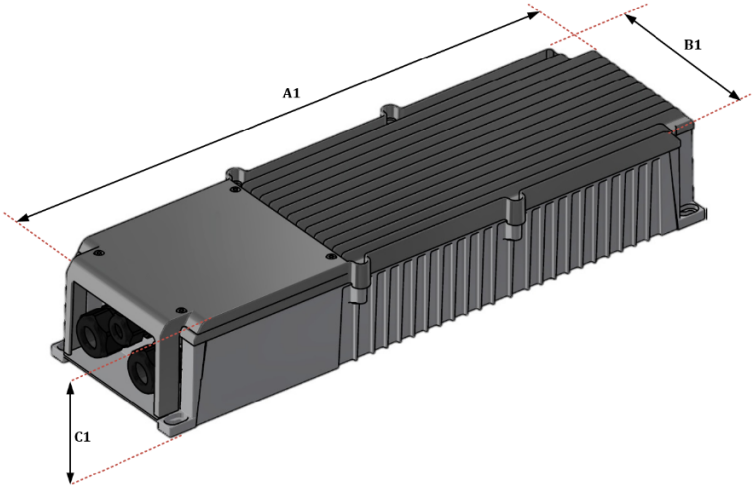

Operational temperatures and humidity

Specification item	Value	Unit	Condition
Ambient temperature	-40...+45	°C	Higher ambient temperature allowed as long as Tcase-max is not exceeded
Tcase-max	85	°C	Maximum temperature measured at T_{case}-point
Tcase-life	80	°C	Measured at T_{case}-point
Maximum housing temperature	110	°C	In case of a failure, inherent by design
Relative humidity	10...90	%	Non-condensing

Lifetime

Specification item	Value	Unit	Condition
Driver lifetime	1,000	hours	Measured temperature at Tcase-point is Tcase-life -10 degrees. Maximum failures = 10%

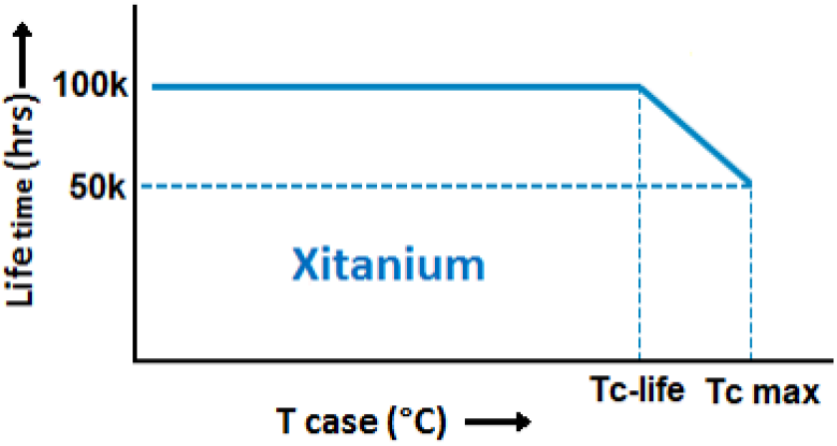

Maximum failures = 10%

Storage temperature and humidity

Specification item	Value	Unit	Condition
Ambient temperature	-40...+85	°C	
Relative humidity	5...95	%	Non-condensing

Programmable features

Specification item	Available	Default setting	Condition
Set Adjustable Output Current (AOC)	Programmable, SimpleSet	700 mA	
LED Module Temperature Protection (MTP)	Yes	OFF	
Driver Temperature Limit (DTL)	Yes	ON	
Adjustable Light Output (ALO)	Yes	OFF	
Adjustable Light Output (ALO) min level	Yes	OFF	
Constant Light Output (CLO)	Yes	OFF	
Adjustable Start-up Time (AST)	Yes	1 s	
Integrated Dynadimmer	Yes	OFF	5-step, light turn-off possible
Min Dim Level (%)	Yes	5 %	
End Of Life indicator (EOL)	Yes	OFF	
OEM Write Protection (OWP)	Yes	OFF	
Luminaire maintenance (DALI part 253)	Yes		

Non-programmable features

Specification item	Value	Condition
Open load protection	Yes	Automatic recovering
Short circuit protection	Yes	Automatic recovering
Over power protection	Yes	Automatic recovering
Hot wiring	No	
Suitable for fixtures with protection class	I	per IEC60598
Overtemperature protection	Yes	Automatic recovering
Diagnostics via Signify tool	Yes	

Inrush current

Specification item	Value	Unit	Condition
Inrush current	20	A	Input voltage 230V
Inrush current	30	A	Input voltage 400V
Drivers / MCB 16A type B @230V AC	≤ 1	pcs	Input voltage 230V
Drivers / MCB 16A type B @400V AC	≤ 2	pcs	Input voltage 400V

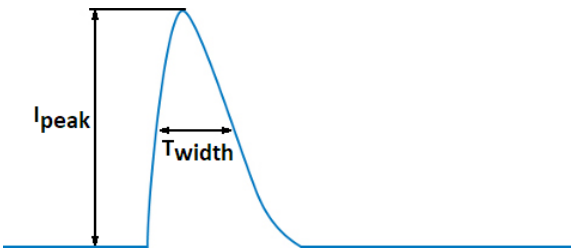

Please refer to the driver design in guide if you use other MCB-types.

If several mini circuit breakers are used directly side-by-side (without distance pieces

a correction factor of 80% has to be applied to the rated current

Driver touch current / protective conductor current / earth leakage current

Specification item	Value	Unit	Condition
Typical Protective Conductor Current (ins. Class I)	1.8	mA rms	Acc. IEC60598-1. LED module contribution not included

Surge immunity

Specification item	Value	Unit	Condition
Mains surge immunity (diff. mode)	10	kV	L-N acc. IEC61000-4-5. 2 Ohm, 1.2/50us, 8/20us
Mains surge immunity (comm. mode)	10	kV	L/N - PE 10kV acc. IEC61000-4-5, 12 Ohm 1.2/50us,8/20us
Control surge immunity (diff. mode)	1	kV	DMX acc. IEC61000-4-5. 2 Ohm, 1.2/50us, 8/20us
Control surge immunity (comm. mode)	4	kV	DMX - L/N acc. IEC61000-4-5. 42 Ohm
Control surge immunity (comm. mode)	4	kV	DMX - EQUI acc. IEC61000-4-5. 42 Ohm 1.2/50us,8/20us

Application Info (Approbation)

Specification item	Value
Approval marks and Certifications	CB / CE / EMC / ENEC / RCM / UKCA / WEEE
Ingress Protection classification (IP)	IP66 / IK08
Coastal rating	SST rating (1000 hours) / C5 environment
Application	Outdoor
Mounting Type	Independent

Graphs

Operating window

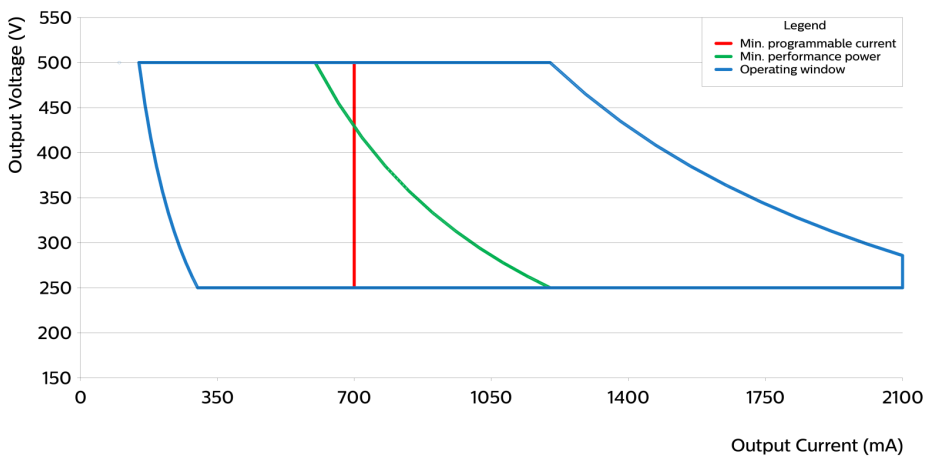

Type	Output current (mA)	Min. output voltage (V)	Max. output voltage (V)	Max. output power (W)
Xi 1800W 220-400V DMX	700	250	500	350
Xi 1800W 220-400V DMX	750	250	500	375
Xi 1800W 220-400V DMX	800	250	500	400
Xi 1800W 220-400V DMX	850	250	500	425
Xi 1800W 220-400V DMX	900	250	500	450
Xi 1800W 220-400V DMX	950	250	500	475
Xi 1800W 220-400V DMX	1000	250	500	500
Xi 1800W 220-400V DMX	1050	250	500	525
Xi 1800W 220-400V DMX	1100	250	500	550
Xi 1800W 220-400V DMX	1150	250	500	575
Xi 1800W 220-400V DMX	1200	250	500	600
Xi 1800W 220-400V DMX	1250	250	480	600
Xi 1800W 220-400V DMX	1300	250	461	600
Xi 1800W 220-400V DMX	1350	250	444	600
Xi 1800W 220-400V DMX	1400	250	428	600
Xi 1800W 220-400V DMX	1450	250	413	600
Xi 1800W 220-400V DMX	1500	250	400	600

Xi 1800W 220-400V DMX	1550	250	387	600
Xi 1800W 220-400V DMX	1600	250	375	600
Xi 1800W 220-400V DMX	1650	250	363	600
Xi 1800W 220-400V DMX	1700	250	352	600
Xi 1800W 220-400V DMX	1750	250	342	600
Xi 1800W 220-400V DMX	1800	250	333	600
Xi 1800W 220-400V DMX	1850	250	324	600
Xi 1800W 220-400V DMX	1900	250	315	600
Xi 1800W 220-400V DMX	1950	250	307	600
Xi 1800W 220-400V DMX	2000	250	300	600
Xi 1800W 220-400V DMX	2050	250	292	600
Xi 1800W 220-400V DMX	2100	250	285	600

Thermal Guard

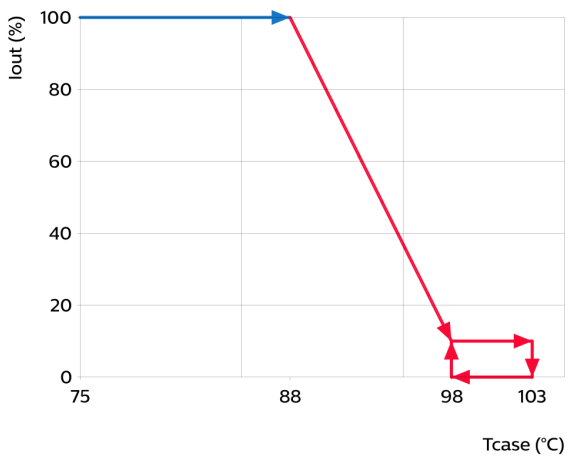

Power factor versus output power

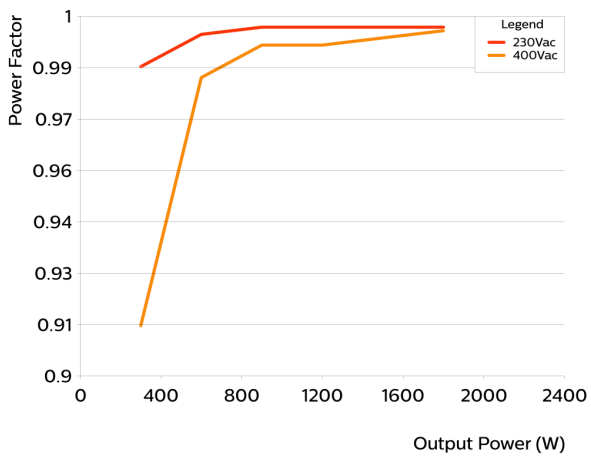

Efficiency versus output power

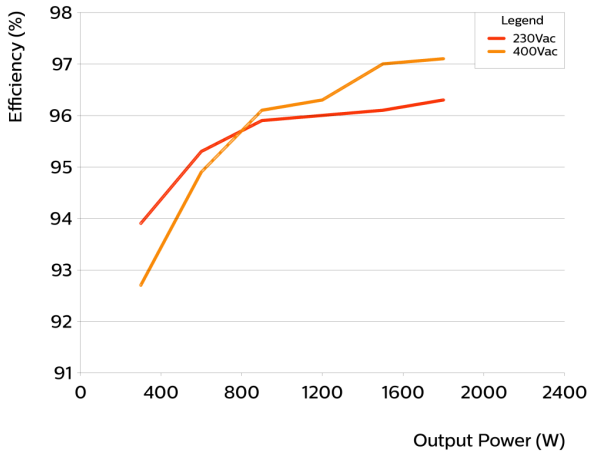

THD versus output power

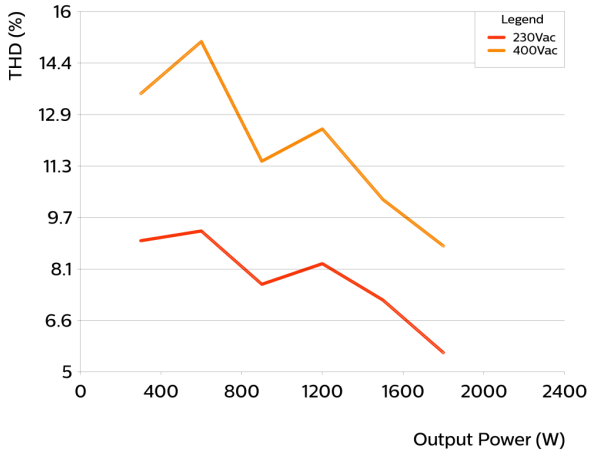

Notes

Note: Parallel connection of output channels is not allowed, and Output channels cannot be connected in series. Also: Output loading in power of the 3 output channels is allowed to be inequal.

© 2026 Signify Holding. All rights reserved. The information provided herein is subject to change, without notice. Signify does not give any representation or warranty as to the accuracy or completeness of the information included herein and shall not be liable for any action in reliance thereon. The information presented in this document is not intended as any commercial offer and does not form part of any quotation or contract, unless otherwise agreed by Signify. All trademarks are owned by Signify Holding or their respective owners.

xitanium