展开尺寸：300x120mm, 单页尺寸：100x120mm

PHILIPS

LED Outdoor Solar wall light
9290046959

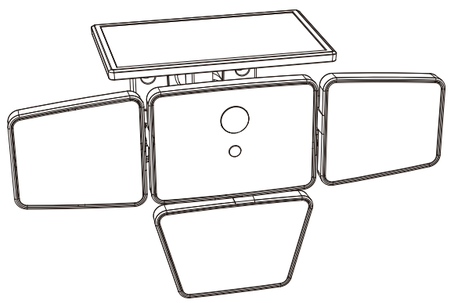

Incl.

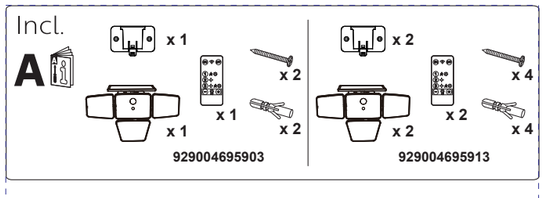

Excl.

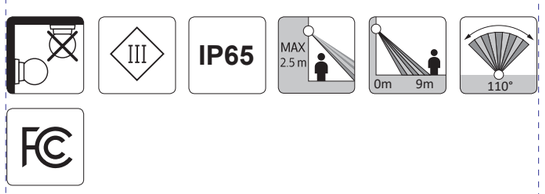

2

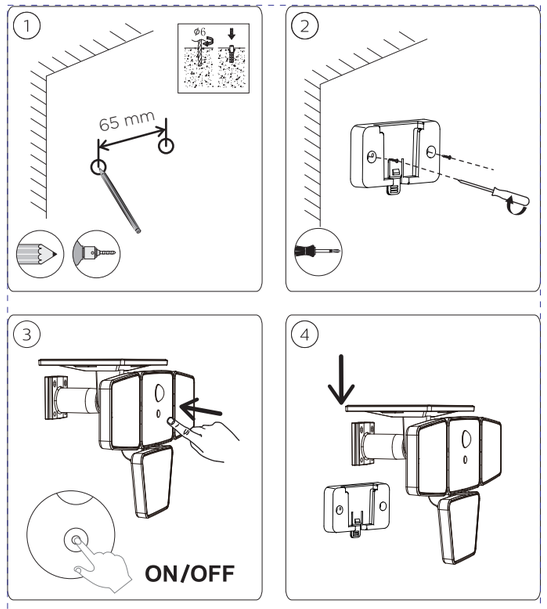

3

展开尺寸：300x120mm, 单页尺寸：100x120mm

a) Remove and immediately recycle or dispose of used batteries according to local regulations and keep away from children. Do NOT dispose of batteries in household trash or incinerate.
b) Even used batteries may cause severe injury or death.
c) Call a local poison control center for treatment information.
d) Battery type: CR2032.
e) Nominal battery voltage:3.0V
f) Non-rechargeable batteries are not to be recharged.
g) Do not force discharge, recharge, disassemble, heat above (manufacturer's specified temperature rating: 40°C) or incinerate. Doing so may result in injury due to venting, leakage or explosion resulting in chemical burns.
h) Ensure the batteries are installed correctly according to polarity (+ and -).
i) Do not mix old and new batteries, different brands or types of batteries, such as alkaline, carbon-zinc, or rechargeable batteries.
j) Remove and immediately recycle or dispose of batteries from equipment not used for an extended period of time according to local regulations.
k) Always completely secure the battery compartment. If the battery compartment does not close securely, stop using the product, remove the batteries, and keep them away from children.

WARNING

- **INGESTION HAZARD:** This product contains a button cell or coin battery.
- **DEATH** or serious injury can occur if ingested.
- A swallowed button cell or coin battery can cause **Internal Chemical Burns in as little as 2 hours.**
- **KEEP** new and used batteries **OUT OF REACH of CHILDREN**
- **Seek immediate medical attention** if a battery is suspected to be swallowed or inserted inside any part of the body.

En México por:
Signify Mexico S.A. de C.V.
Av. La Palma N° 6-Col.
La Herradura Huixquilucan
Edo. De México, C.P. 52784 -
R.F.C. PME-620620-E84
Centro de Contacto 800-508-9000
Favourline@signify.com

Signify North America Corporation
400 Crossing Blvd, Suite 600
Bridgewater, NJ 08807, USA

Signify Canada Ltd./Signify Canada Ltée
281 Hillmount Road,
Markham, ON, Canada L6C 2S3

Philips and the Philips Shield Emblem are registered trademarks of Koninklijke Philips N.V. and are used under license

www.philips.com/lighting

© 2025 Signify Holding
signify

5

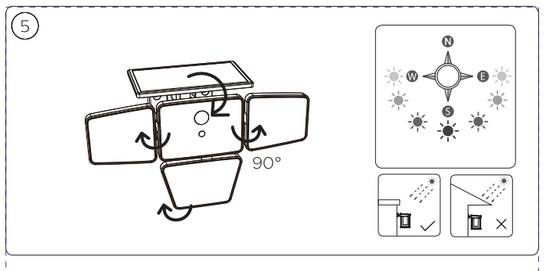

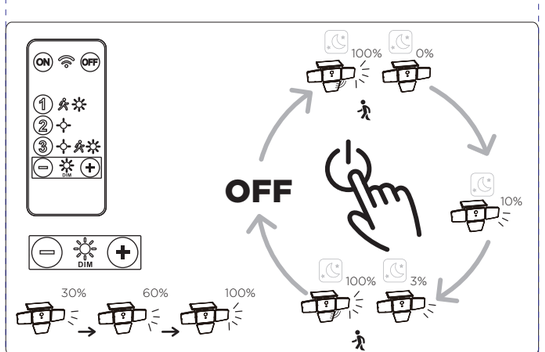

4

This device complies with Part15 of the FCC Rules. Operation is subject to the following two conditions: (1) This device may not cause harmful interference, and (2) This device must accept any interference received, including interference that may cause undesired operation.
Le présent appareil est conforme aux CNR d'Industrie Canada applicables aux appareils radio exempts de licence. L'exploitation est autorisée aux deux conditions suivantes: (1) l'appareil ne doit pas produire de brouillage, et (2)l'appareil doit accepter tout brouillage radioélectrique subi, même si le brouillage est susceptible d'en compromettre le fonctionnement.
Changes or modifications not expressly approved by the party responsible for compliance c ould void the user's authority to operate the equipment.
Les changements ou modifications non expressément approuvés par la partie responsable de la conformité peuvent annuler l'autorité de l'utilisateur à utiliser l'équipement.

CAN ICES (B) / NMB (B)

This device has been tested and found to comply with the limits for a Class B digital device pursuant to Part 15 of the FCC Rules. These limits are designed to provide reasonable protection against harmful interference in a residential installation. This device generates, uses, and can radiate radio frequency energy and, if not installed and used in accordance with the instructions, may cause harmful interference to radio communications. However, there is no guarantee that interference will not occur in a particular installation. If this device does cause harmful interference to radio or television reception, which can be determined by turning the device off and on, the user is encouraged to try to correct the interference by one or more of the following measures:
Reorient or relocate the receiving antenna
Increase the separation between the device and receiver
Connect the device into an outlet on a circuit different from that to which the receiver is connected
Consult the dealer or an experienced radio/television technician for help.
Ce produit a été testé et jugé conforme aux limites imposées à un appareil numérique de Classe B prescrites par la section 15 des règles de la FCC. Ces limites sont destinées à fournir une protection raisonnable contre le brouillage nuisible dans une application résidentielle. Ce produit génère, utilise et peut émettre de l'énergie sous forme de fréquences radio et, s'il n'est pas installé et utilisé conformément aux instructions, il peut causer un brouillage nuisible aux radiocommunications. Aucune garantie n'est néanmoins fournie quant à l'absence de brouillage dans une installation précise. Si ce produit semble causer un brouillage nuisible aux communications radio ou télévision, le vérifier en éteignant puis en rallumant le dispositif, et le cas échéant, l'utilisateur est invité à corriger la situation en appliquant l'une ou plusieurs des mesures suivantes :
Modifier l'orientation ou déplacer l'antenne de réception.
Augmenter la distance entre le dispositif et le récepteur.
Raccorder le dispositif à une prise sur un circuit différent de celui auquel le récepteur est branché.
Obtenir de l'aide auprès du vendeur ou d'un technicien en radio/télévision.

5

signify

Brand	PHILIPS
Product Family	LED
Shape	
Wattage	8.7
Template Ref.	N/A
SGS number	7465010
12-NC.NBR	324166100202
Masterdrawing	N/A
CRC Ref.	
Description	Nysil Security manual
Surface treatment	N/A

Barcode No. 8720169269156

Operator(s) jane.zheng

VERSION No. v1

Date in 21/09/2023

Date amended 22-Sep-23

Cyan Magenta Yellow Black
Guides Diecut

Date Check

☐ Check briefing Traffic

Artwork document

☐ Legend ☐ Number of colors
☐ 12NC ☐ Trapping/Bleed
☐ Barcode ☐ Images hires
☐ Diecut ☐ Jobsizes

Approval

☐ QC Lithographer SGS Production
☐ Product Manager Allen Lai
☐ Traffic Manager Esdon Lu

7465010_v1 Cyan Magenta Yellow Black Guides Diecut 22-Sep-23