PHILIPS

Elite CRI 90 Family

Smart

Scalable

Sustainable

interact ready.

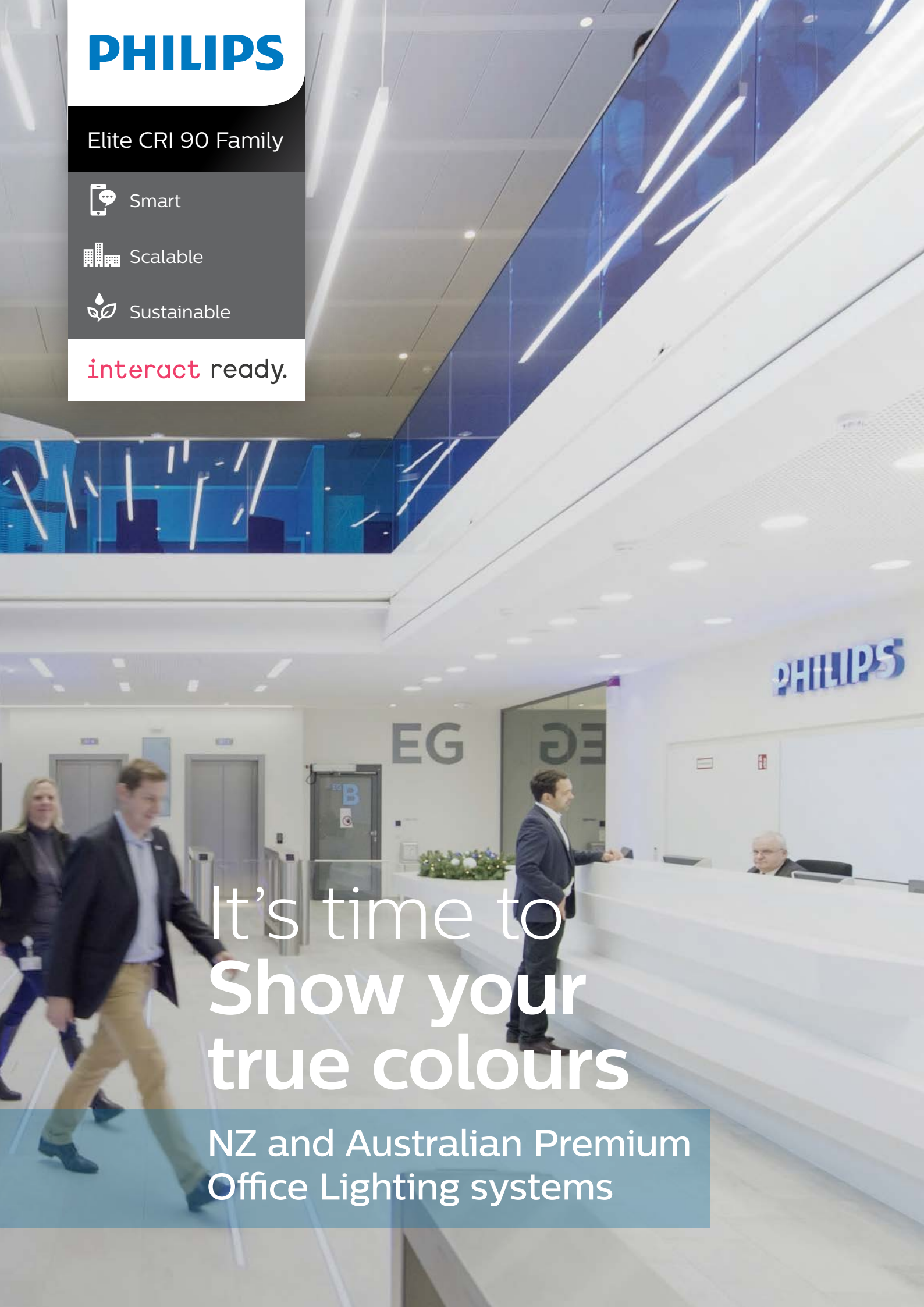

It's time to **Show your true colours**

NZ and Australian Premium Office Lighting systems

Professionals count on **Philips Elite** when **first-class** lighting is essential

When it comes to taking office lighting to the next level, professionals count on **Philips Elite** – a family of professional, high quality IoT ready luminaires that support lighting inspired well-being.

Smart

Open up a brand new world of **connected lighting benefits** by creating automated, intelligent and interactive installations.

Scalable

Design flexible systems using interoperable components and sensors that allow you to upgrade or expand as your needs change.

Sustainable

Maximise your sustainability outcomes by combining highly efficient, long-life LED luminaires with smart lighting control solutions.

Contents

About CRI 90 lighting 5

PowerBalance Elite 8

Elite Panel 10

SmartBalance Elite 12

FlexBlend Elite 14

TrueLine Elite 17

LuxSpace Elite 20

Control options 22

About CRI 90 lighting

Step-up to **new building requirements**

Your employees' health and well-being are important, and you of course want to create the best conditions to encourage creativity and optimal productivity. Lighting plays a big part in that. Discover the benefits of our new Philips Elite CRI 90 luminaires for office applications.

Why make a shift to CRI 90?

With office lighting design high on many organisations' agenda, the new CRI 90 luminaires support designing for health and well-being as defined by the WELL Building Standard.

With the introduction of our CRI 90, the R_9 also increases to ≥ 50 which meets the colour quality requirements from WELL V1 and V2. Plus, the transition from CRI 80 to CRI 90 does not entail any significant loss of energy efficiency (lumen/Watt) and no reduction of lumen output.

Another consideration is the National Construction Code (NCC) which is an Australian performance-based code. It sets the minimum required level for the safety, health, amenity, accessibility and sustainability of buildings.

Section J, Energy Efficiency, Part J6 covers artificial lighting and power energy efficiency provisions. Maximum Illumination Power Density (IPD) allowances are given here, with an Adjustment Factor for Light Colour - CRI 90.

Two good reasons

Build WELL

The WELL Building Standard, launched in 2014, is leading the global movement to transform buildings and communities in ways that help people thrive. It explores how design, operations and behaviours within the places where we live, work, learn and play can be optimised to advance human health and well-being. Lighting is one of the seven concepts in this global rating system.

The new CRI 90 portfolio also meets the additional requirement for red rendering: R_9 ≥ 50. It is fully compatible with efficient lighting automation with daylight and occupancy sensors (why put the light on when there's no one there?). CRI 90 takes lighting-led well-being to the next level.

R_9 ≥ 50 requirement explained

The WELL Building Standard requires that next to the standard set of test colour samples as measured via the CRI, an additional red colour test sample (R_9) is rendered in a good way. R_9 represents how red objects are rendered in comparison to the reference light source. User tests have shown that people find the colour appearance of reddish objects very important. Red also has a positive impact on skin tones.

Efficiency and lumen output

Switching to CRI 90 will without a doubt make your office a more pleasant place to work, and support employee well-being. Indeed, this marks a unique achievement in the lighting industry as there is no significant loss of energy efficiency (lumen/ Watt), and no reduction of lumen output, when transitioning to CRI 90. Energy efficiency remains the same as in the CRI 80 portfolio within ± 3% tolerance. So there's really no reason not to upgrade.

Standard CRI 80

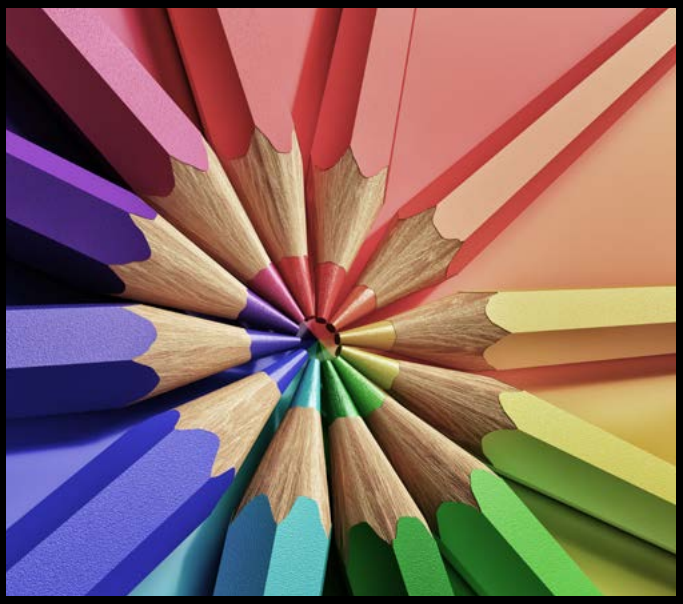

CRI 90

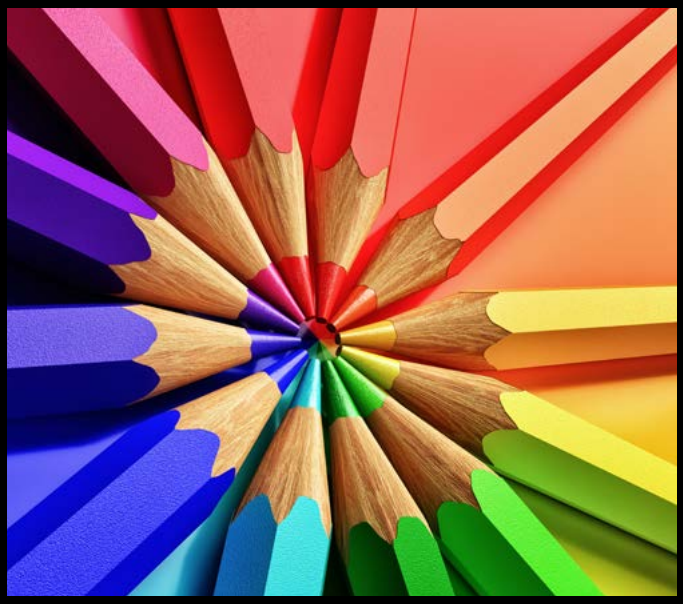

Why does CRI 90 better meet the WELL standard than CRI 80?

Colour Quality is one of the features of the 'Light' concept within the WELL Building Standard. It indicates: "Colour quality impacts visual appeal and can either contribute to or detract from occupant comfort. Poor colour quality can reduce visual acuity and the accurate rendering of illuminated objects. For instance, foods, human skin tones and plants may appear dull or unsaturated under lights that have low colour quality metrics."

Our higher CRI 90 spec means colours are rendered more faithfully compared with our CRI 80 products.

Please note: Printed colours, or those displayed on monitors, may vary from the actual appearance of colours when illuminated.

A bright place to work

Most office lighting today is CRI 80, so the shift to CRI 90 marks a change in lighting quality – and we are implementing this improved CRI across our Pacific office portfolio as the new standard. See the next sections for the applicable luminaires.

"**Lighting can be used to create modern, flexible and comfortable working environments** that foster creativity and innovation."

The Elite CRI 90 luminaire family

PowerBalance Elite

Future ready your business with smart office lighting

Whether you're looking to reduce energy costs or improve your building's lighting flexibility, PowerBalance is all you need to create a first class LED lighting installation. By balancing horizontal and vertical brightness and combining it with low glare, PowerBalance creates an attractive environment in which both the entire space, plus the individual workspaces are perfectly lit.

CRI 90 / SDCM3 are standard with PowerBalance Elite and support designing for health and well-being as defined by the WELL building Standard. Lighting controls play an important part in providing complete office lighting solutions. Signify is able to offer both Wireless and Wired scalable solutions such as Dali and Zigbee connectivity. More details on page 23.

- High quality CRI 90 / R9 ≥ 50 LED chips with SDCM 3 specification ensure the best colour quality and minimal colour shift
- Choice of 2 lumen outputs per colour temperature to suit all office needs
- Multiple choices of control interfaces are available to make lighting control simple
- Three colour temperature options are available to enhance the working environment
- Best in class luminaire efficacy of 135lm/W, ensures the lowest TCO payback

- 135lm/W efficacy
- 100,000hrs at L70
- Dali
- Connected Interact Pro
- Tunable White
- IP20
- CRI 90 / R9 ≥ 50
- COI Compliant

Specifications

MODEL	PowerBalance (RC650B X)					
Type	LED30	LED30	LED30	LED40	LED40	LED40
Power (PSD)	22W	22W	22W	29W	29W	29W
System Lumens	3000lm	2900lm	2800lm	4000lm	3800lm	3700lm
System Efficacy	136lm/W	132lm/W	127lm/W	138lm/W	131lm/W	127lm/W
Colour Temperature	4000K	3500K	3000K	4000K	3500K	3000K
Size (mm)	1200x300 & 600x600					
Mounting	Recessed					
Input Voltage	220-240V					
Electrical Class	I					
Driver Type	PSD-Dali, WIA-Wireless, SR-System Ready, Tunable White Dali 208 & 209					
Driver Lifetime	*100,000hrs / max 10% Failures					
Electrical Connection	1.5m pre-wired flex & plug (CAU)					
Lumen Maintenance	100,000hrs/L70 65,000hrs/L80 50,000hrs/L85 (Based on TM21 Calculations)					
SDCM	<3					
CRI	CRI 90 / R9 ≥ 50, Cyanosis Observation Compliant					
IP Rating	IP20					
UGR Rating	UGR19					
Optical Type	Smart Pyramid Optics					
Finish	White (RAL 9003)					
Warranty	5 Years					

*Based on PSD-DALI model

Polar intensity

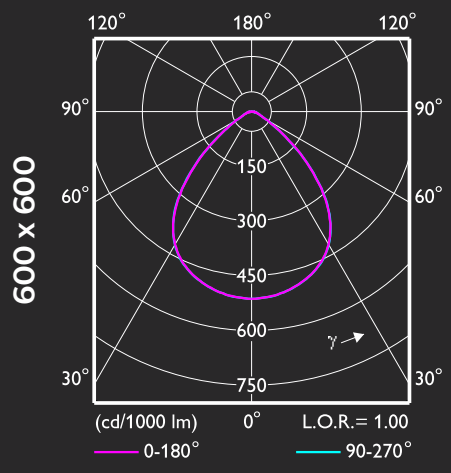

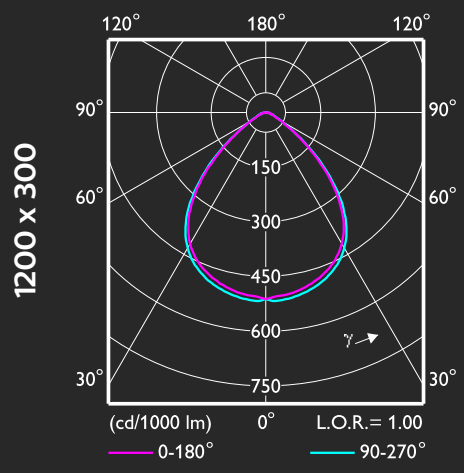

Elite Panel

Professionals count on the new Philips Elite Panel

The Elite RC190 office compliant LED panel meets the needs of today's strict office requirements. With CRI 90 and SDCM3 as standard range attributes, the Elite panel supports designing for employee health and well-being.

In addition to high quality lighting, combining your luminaires with a lighting control system provides you with an integrated solution with many additional benefits. See more about control options on page 23.

- High quality CRI 90 / R9 ≥ 50 LED chips with SDCM 3 specification ensure the best colour quality and minimal colour shift.
- Comes standard with DALI drivers that have an adjustable drive current by means of dip-switches, allowing for easy on site changes to lumen output if required.
- Multiple choices of control interfaces including both Wireless and Wired scalable solutions such as Dali and Zigbee connectivity. More details refer to page 23.
- The high IP44 rating allows for higher maintenance factors to be used in designs which leads to fewer luminaires being used in projects.
- Three colour temperature options are available to enhance the working environment.

- 100lm/W efficacy
- Dali
- Connected Interact Pro
- Tunable White
- 100,000hrs at L80
- CRI 90 / R9 ≥ 50
- IP44

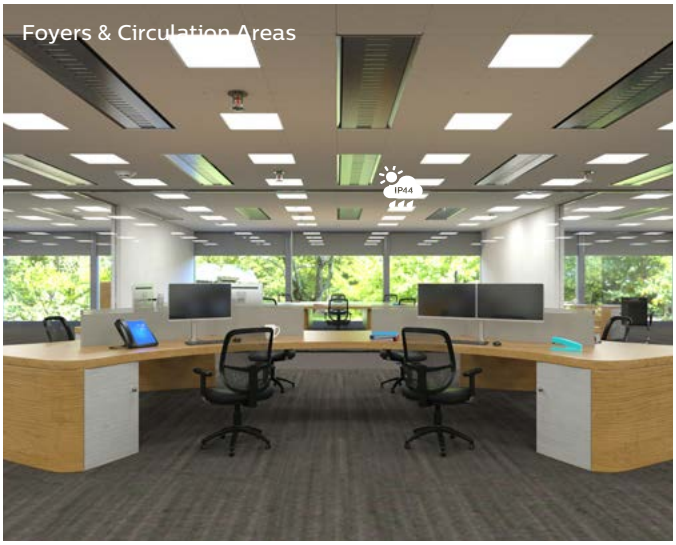

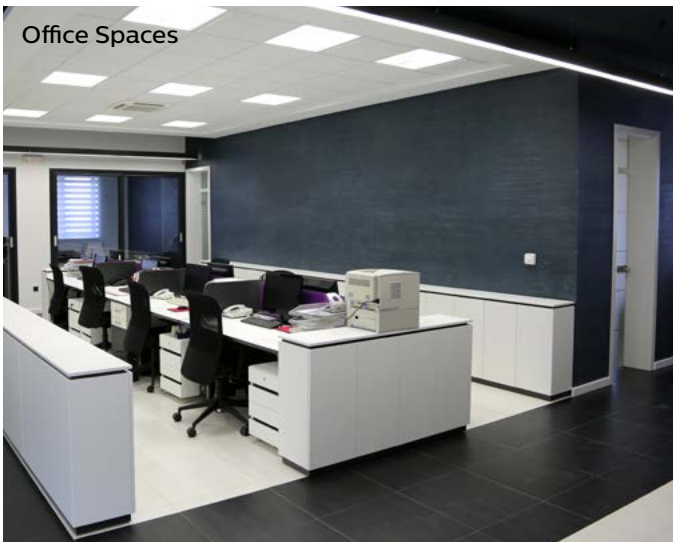

Specifications

MODEL	ELITE PANEL (RC190X)					
Type	LED36	LED34	LED32	LED27	LED25	LED23
Power (PSD)	36W	36W	36W	28W	28W	28W
System Lumens (lm)	3600/*4000	3450/*3800	3150/*3600	2700	2500	2350
System Efficacy	100lm/W	95lm/W	90lm/W	95lm/W	90lm/W	85lm/W
Colour Temperature	4000K	3500K	3000K	4000K	3500K	3000K
Size (mm)	1200 x 600, 1200 x 300, 600 x 600			600 x 300		
Mounting	Recessed					
Input Voltage	220-240V					
Electrical Class	II					
Driver Type	PSD-Dali, WIA-Wireless, SR-System Ready, Tunable White Dali 208 & 209					
Driver Lifetime	100,000hrs nominal					
Electrical Connection	1.5m pre-wired flex & plug (CAU) with plug in Driver					
Lumen Maintenance	100,000hrs/L80 75,000hrs/L85 50,000hrs/ L90 (Based on TM21 Calculation)					
SDCM	3					
CRI	CRI 90 / R9 ≥ 50					
IP Rating	IP44					
UGR Rating	UGR19**					
Material	Micro Prism front lens					
Finish	White (RAL 9003)					
Warranty	5 Years					

*Lumen output for 1200x600 size. **Exception of 6x3 (UGR 22)

Polar intensity

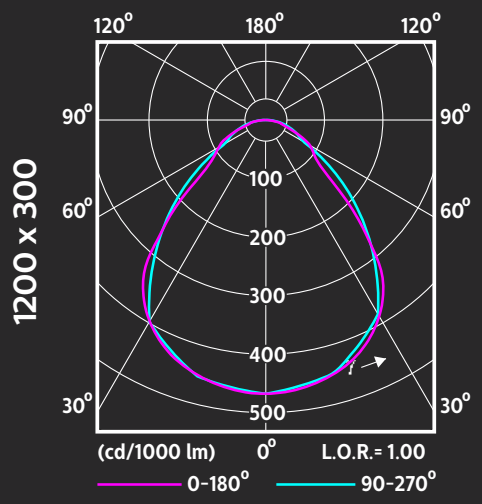

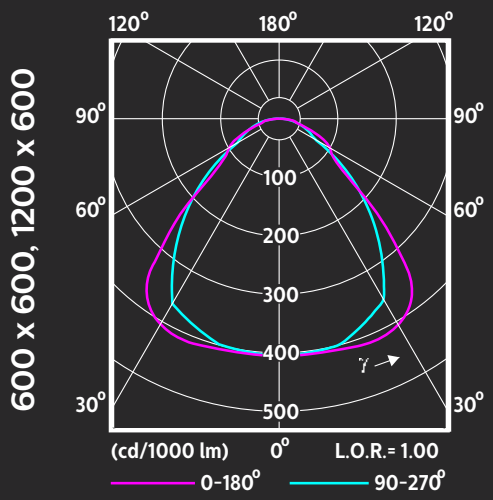

SmartBalance Elite

Smart and functional suspended or surface-mounted luminaires

The SmartBalance surface mounted luminaire can be easily installed on the ceiling, making it an ideal solution for a wide range of office applications. This stylish luminaire, with its elegant, unobtrusive design, prevents ceiling clutter and fits seamlessly within your office interior. The surface mounted gear tray adapter, with its clean through-wiring, allows you to freely position the luminaire in relation to the cable feed.

The SmartBalance suspended luminaire has a soft, minimalist design that adds appeal to any office. Its high quality of light contributes to a well lit and bright ceiling.

- **Long lasting and reliable LED technology**
  SmartBalance luminaires are based on sustainable, long-lasting LED technology that offers benefits beyond simple illumination.
- **A flexible office toolkit with modern design**
  Combining high quality of light and attractive design, SmartBalance offers flexible lighting throughout your office building. Available in different archetypes (suspended, surface mounted) SmartBalance delivers a versatile lighting solution suitable for a wide range of office applications.
- **High-quality office compliant lighting**
  SmartBalance luminaires are available with inner masking that 'traps' the light to create a subtle glow, providing a smooth, soft transition. This lowers the brightness perception for a more comfortable working environment. Thanks to its advanced optic technology, SmartBalance delivers high-quality, office-compliant lighting for different office applications. This low-glare LED luminaire ensures excellent uniformity on the ceiling.
- **Easy to install and maintain**
  SmartBalance is designed to make installation as simple as possible. Surface mounted and suspended luminaires consist of two parts, a gear tray and a housing that can be easily clicked together. As standard, we offer installation features to make your life easier. These include a service cord, connectors, freedom of mains input for surface mounted luminaires, and a clutch device for suspended luminaires.

- 50,000hrs @ L85
- CRI 90 / R9 > 50
- Dali
- Compact, lightweight and unobtrusive

Specifications

MODEL	SmartBalance (SM480, SP480 & SP482P)	
	Surface Mounted (SM)	
Type	LED35	LED40
Power (PSD)	28W	33W
System Lumens	3500lm	4000lm

	Suspended (SP)				
	Direct		Direct/Indirect		
Type	LED35	LED40	LED50	LED40	LED50
Power (PSD)	28W	33W	40W	33W	40W
System Lumens	3500lm	4000lm	5000lm	4000lm	5000lm
System Efficacy	125lm/W	121lm/W	128lm/W	121lm/W	128lm/W
Size (L)	1340mm				

GENERAL	
Colour Temperature	3000K & 4000K
Mounting	Suspended option supplied with 1.5M drop wires and ceiling connection box, Coupling device (max 3 lums)
Input Voltage	220-240V
Electrical Class	I
Driver Type	PSD-Dali
Driver Lifetime (5% failure-rate)	50,000hrs
Electrical Connection	1.5m 5core pre-wired flex for Suspended option only, PIP (Push-In Connection) for Surface Mount
Lumen Maintenance	50,000hrs @ L85
SDCM	3
CRI	CRI90 (R9 is equal to or greater than 50)
IP Rating	IP20
UGR Rating	UGR19
Material	Housing: Polycarbonate & sheet metal, Cover/optic PMMA
Optic type	MLO (Micro Lens Optic)
Finish	White, Silver
Warranty	5 Years

Polar intensity

SM480C LED35S, LED40S
SP480P LED35S, LED40S

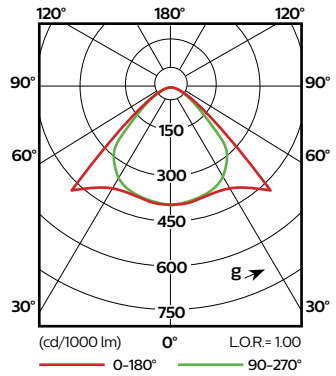

SP482P LED40S
SP482P LED50S

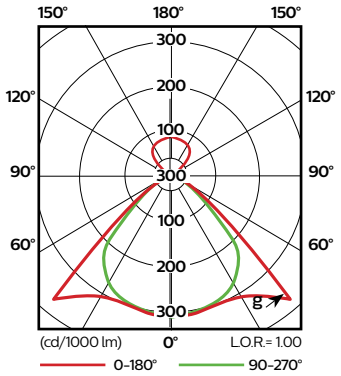

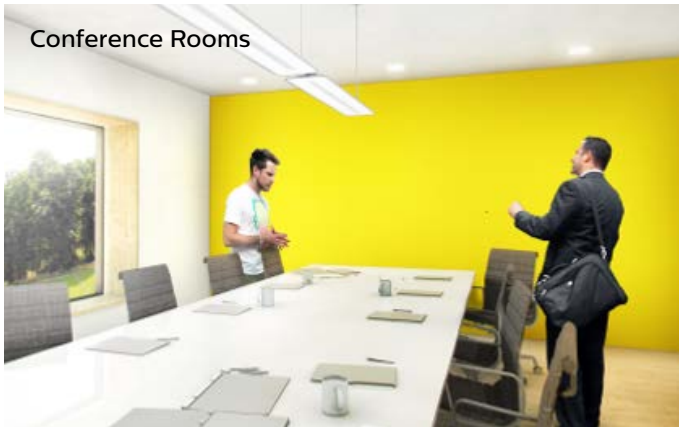

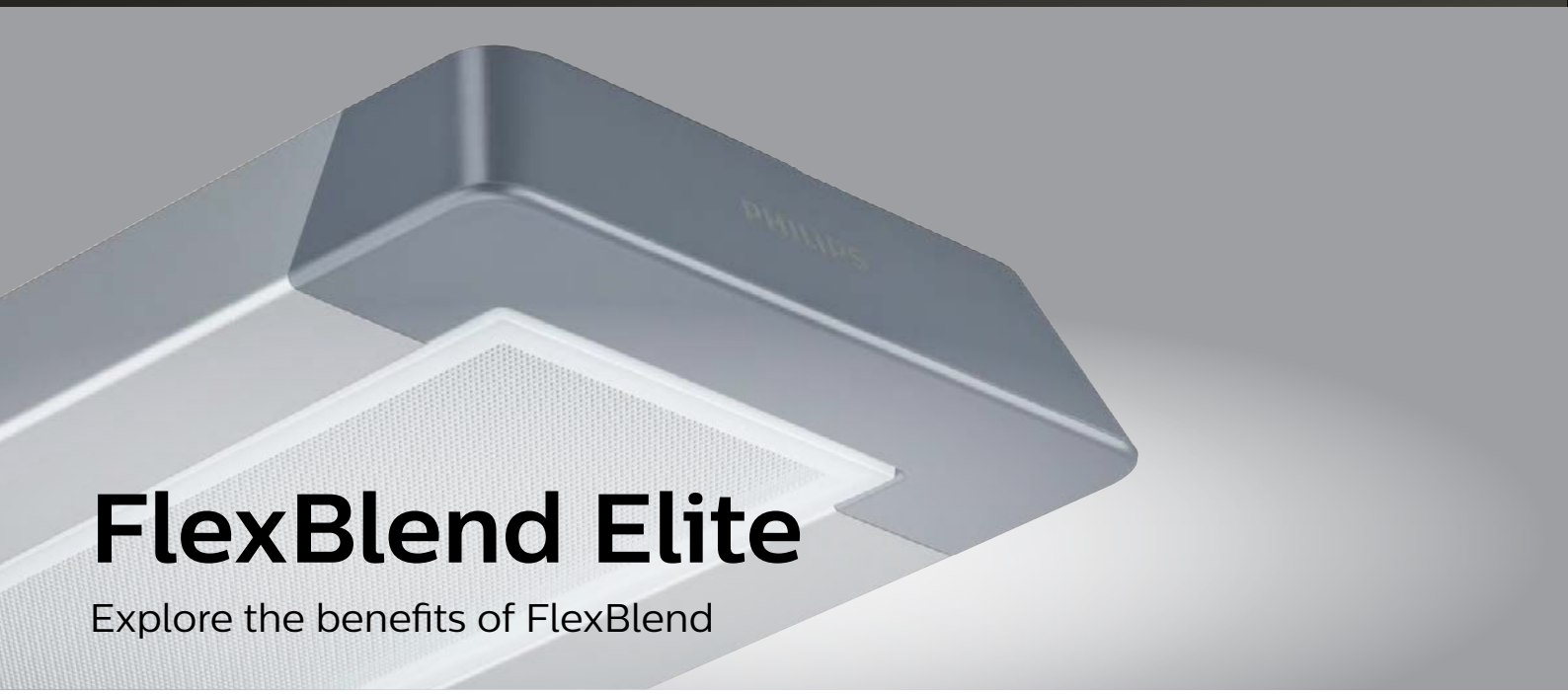

FlexBlend Elite

Explore the benefits of FlexBlend

Next to efficiency and good installation payback, it's also important to ensure that ceilings remain neat and uncluttered. Today's office lighting solutions need to offer both flexibility and compliance with the relevant norms and regulations. FlexBlend luminaires tick all of these boxes and additionally offer great value for money.

- **Office-compliant lighting**
  High-quality compliant lighting: Office Compliant Optics UGR <19. Minimises flickering and strobe light effects and increases visual comfort in the workplace.
- **Application flexibility**
  The FlexBlend luminaire fits into every office area, from receptions and corridors to open plan offices and meeting rooms. It is available in square and rectangular forms and is suitable for recessed, surface or suspended applications.
- **Adaptability in design**
  FlexBlend's design ensures easy installation in the field and adaptation as and when needs change. As an example, a suspended luminaire fit-out could be changed to surface mounted at any time, and vice versa.
- **Fast return on investment**
  By combining the benefits of good efficiency (up to 144 lm/W), reliability, long service life, ease of installation and maintenance, FlexBlend offers a great return on your investment.
- **Easy connection to IoT**
  You can get much more out of your lighting when it's connected to IoT. FlexBlend is available with multiple choices of control interfaces including both Wireless and Wired scalable solutions such as Dali and Zigbee connectivity.
  See control options on page 23.

- Up to 144lm/W Efficacy
- Dali
- Connected Interact Pro
- L75 @ 100,000hrs
- L80 @ 70,000hrs
- L85 @ 50,000hrs
- CRI 90 / R9 >50
- COI Compliant
- Surface / Suspended & Recessed mount
- Standalone or continuous line

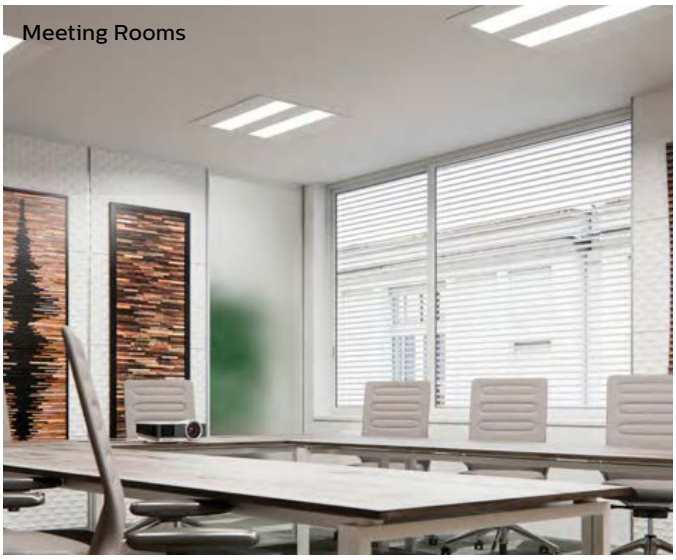
Meeting Rooms

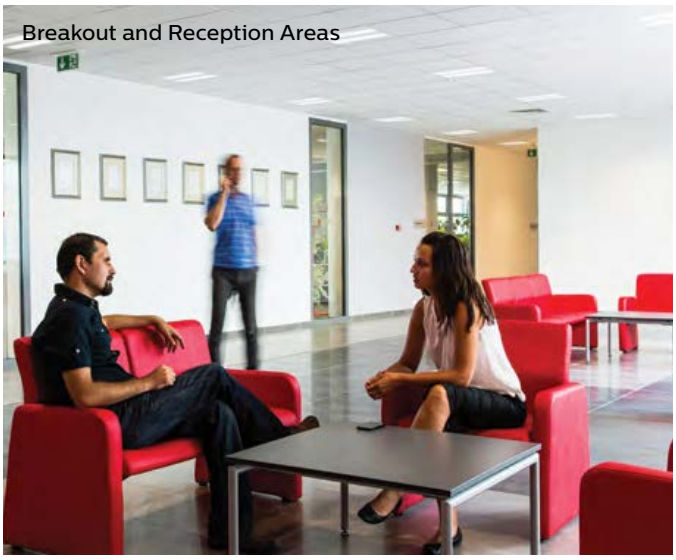
Breakout and Reception Areas

Specifications

MODEL	Suspended & Surface							
	SP340P & SP341P Suspended (Direct) & SM340C & SM342C Surface							
Type	LED21	LED28	LED36	LED42	LED26	LED35	LED45	LED52
Power (PSD)	16W	20W	26W	32W	20W	25W	32W	39W
System Lumens	2100lm	2800lm	3600lm	4200lm	2600lm	3500lm	4500lm	5200lm
System Efficacy	131lm/W	140lm/W	138lm/W	131lm/W	130lm/W	140lm/W	140lm/W	133lm/W

	SP342P & SP343P Suspended (Direct-Indirect)								
Type	LED28	LED36	LED48	LED52	LED35	LED45	LED60	LED66	LED70
Power (PSD)	20W	26W	36W	39W	26W	32W	46W	49W	52W
System Lumens	2100/700lm	2800/800lm	3600/1200lm	4000/1200lm	2600/900lm	3500/1000lm	4500/1500lm	5000/1600lm	5200/1800lm
System Efficacy	140lm/W	138lm/W	133lm/W	133lm/W	133lm/W	140lm/W	130lm/W	134lm/W	134lm/W
Size*	1200mm				1470mm				

MODEL	Recessed		
Model	RC340		
Type	LED28	LED36	LED42
System Lumens	2800lm	3600lm	4200lm
Power (PSD) Opal	24W	31W	36W
PCS	21W	27W	32W
MLO	30W	39W	48W
System Efficacy average	112lm/W	112lm/W	108lm/W
Size *	VPC (Visible Profile Ceiling) 597mmx597mm, 1197mmx297mm,1197mmx147mm		

(PCV) Plaster Ceiling options available on request

GENERAL	
Colour Temperature	3000K & 4000K
Mounting (suspended & surface)	Stand-alone & Continuous Line , Suspended option supplied with 1.5M drop wires and ceiling connection box
Input Voltage	220-240V
Electrical Class	I
Driver Type	PSD-Dali, WIA-Wireless, SR-System Ready
Driver Lifetime	100,000hrs
Electrical Connection	1.5m 5core pre-wired flex for Suspended option only, PIP (Push-In Connection) for Surface Mount and Recessed
Lumen Maintanance	100,000hrs / L75 70,000hrs / L80 50,000hrs / L85 (Based on TM21 Calculation)
SDCM	3
CRI	CRI90 (R9 is equal to or greater than 50), Cyanosis Observation Compliant
IP Rating	IP20
UGR Rating	UGR19
Material	Steel Frame, Micro Prisim front lens
Finish	White (RAL 9003) , Silver (RAL 9006) , Black RAL 9004)
Warranty	5 Years

Large open plan offices

Polar intensity

MLO

Optimized bean, office-compliant homogenous exit window look & feel

RC340 MLO

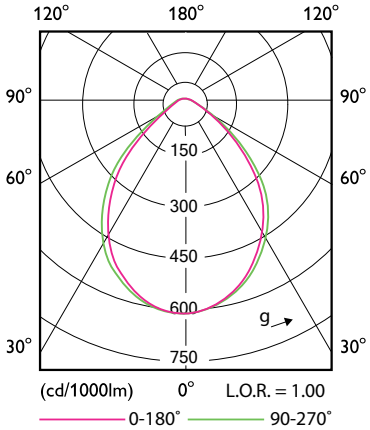

PCS (TXT)

Office-compliant, wider beam shape with a relatively higher vertical illuminance

RC340 PCS

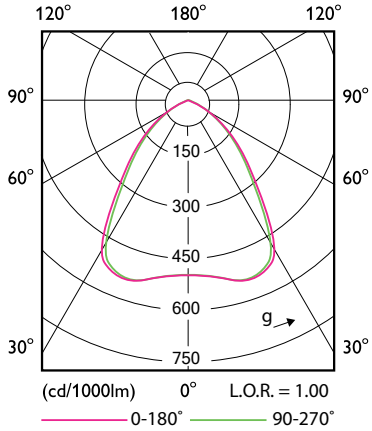

OPAL

Non-office compliant, homogenous look & feel, high luminance at high angles

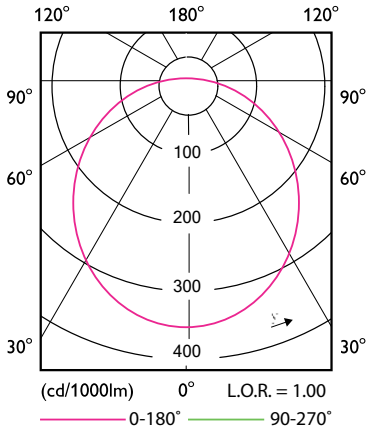

SP340 MLO

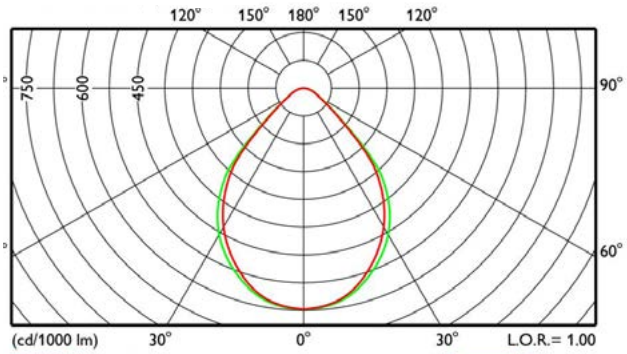

SP342 MLO

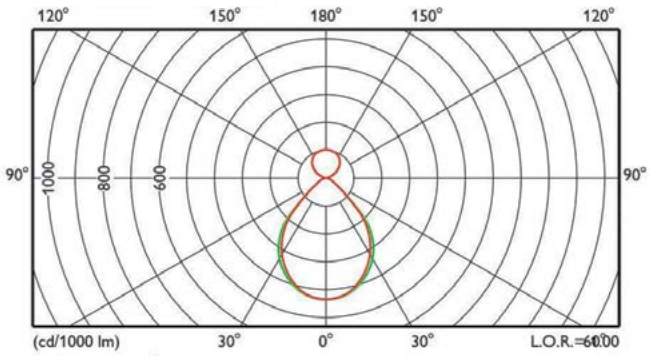

SP340 PCS

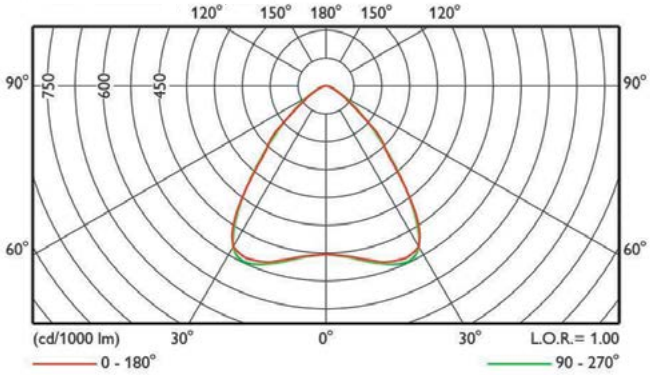

SP342 PCS

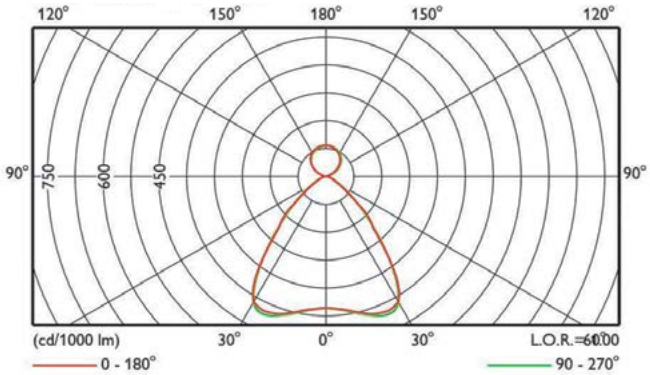

TrueLine Elite

The right luminaire for every space

The TrueLine family offers various mounting options; suspended, surface-mounted and recessed. It can be used as a standalone individual luminaire or as a continuous line of light. You can also choose to apply direct or indirect lighting, depending on the space and its purpose. The TrueLine range's excellent design uniformity is maintained across all standard and specifically tailored lighting applications.

Lighting can play a significant role in the productivity and happiness of employees in the workplace. CRI 90 and SDCM3 are standard with TrueLine Elite luminaires, and support designing for health and well-being, as defined by the WELL Building Standard.

Beyond creating ideal lighting conditions, additional energy savings and benefits can be realised by utilising lighting controls with the luminaires. Learn more about the control options on page 23.

- High quality CRI 90 LED chips with SDCM 3 specification ensure the best colour quality and minimal colour shift.
- Various lumen output options allow for total flexibility in the design in process.
- Multiple choices of control interfaces including both Wireless and Wired scalable solutions such as Dali and Zigbee connectivity.
- Multiple lengths 0.6m, 1.2m, 1.5m and 2.4m.

- Up to 150lm/W Efficacy
- CRI 90 / R9 >50
- Dali
- Connected Interact Pro
- Surface / Suspended & Recessed mount
- L75 @ 100,000hrs
- L80 @ 70,000hrs
- L85 @ 50,000hrs
- Standalone or continuous line

Meeting Room Lighting

Silo Office Lighting

Lobby Lighting

Open Plan Office Lighting

Specifications

MODEL	SP530P & SP531P Suspended (Direct) & SM530C Surface							
Type	LED15	LED25	LED34	LED40	LED19	LED31	LED43	LED50
Power (PSD)	10W	18W	24W	28W	12W	22W	28W	34W
System Lumens	1500lm	2500lm	3400lm	4000lm	1900lm	3100lm	4300lm	5000lm
System Efficacy	150lm/W	139lm/W	141lm/W	142lm/W	158lm/W	141lm/W	153lm/W	147lm/W
Size*	1130mm				1410mm			

MODEL	SP530P & SP531P Suspended (Direct) & SM530C Surface							
Type	LED21	LED36	LED49	LED58	LED29	LED47	LED66	LED77
Power (PSD)	15W	25W	36W	41W	19W	32W	46W	56W
System Lumens	1500/ 660lm	2500/ 1100lm	3400 /1550lm	4000 /1850lm	1900 /1000lm	3100 /1650lm	4300 /2300lm	5000 /2700lm
System Efficacy	144lm/W	144lm/W	138lm/W	143lm/W	152lm/W	147lm/W	143lm/W	138lm/W
Size*	1130mm				1410mm			

MODEL	SP533P Suspended (Direct-Indirect)			
Type	LED24	LED41	LED33	LED54
Power (PSD)	21W	36W	29W	51W
System Lumens	1500/940	2500/1600	1900/1400	3100/2300
System Efficacy	116lm/W	114lm/W	114lm/W	106lm/W
Size*	1130mm		1410mm	

MODEL	Trueline Elite Extrusion (Recessed) RC530B/RC531B/RC533B							
Type	LED15	LED25	LED34	LED40	LED19	LED31	LED43	LED50
Power (PSD)	10W	18W	24W	28W	12W	22W	28W	34W
System Lumens	1500lm	2500lm	3400lm	4000lm	1900lm	3100lm	4300lm	5000lm
System Efficacy	150lm/W	139lm/W	141lm/W	142lm/W	158lm/W	141lm/W	153lm/W	147lm/W
Size*	VPC (Visible Profile Ceiling) 1197mm, PCV (Plaster Ceiling) 1152mm				VPC (Visible Profile Ceiling) 1497mm, PCV (Plaster Ceiling) 1432mm			

GENERAL	
Colour Temperature	3000K & 4000K
Mounting	Standalone & Continuous line with line end & line feature connection, Suspended option supplied with wires & ceiling connection box
Input Voltage	220-240V
Electrical Class	I
Driver Type	PSD-Dali, WIA-Wireless, SR-System Ready
Electrical Connection	1.5m 5 core pre-wired flex for suspended option only, PIP (Push-In -Connection) for surface & recessed mount
Lumen Maintenance	100,000hrs / L75 70,000hrs / L80 50,000hrs / L85 (Based on TM21 Calculation)
SDCM	3
CRI	CRI 90 (R9 is equal to or greater than 50)
IP Rating	IP40
UGR Rating**	UGR19
Material	Aluminium Frame, PMMA frosted front lens
Finish	Black (RAL9004), White (RAL 9003) & Aluminium Finish
Warranty	5 Years

0.6m, 1.8m & 2.4m lengths available on request.
*Size for stand-alone PSD models.
** For 530 & 532 models.

18

Polar intensity

TrueLine **Suspended**

Office compliant
SP530P

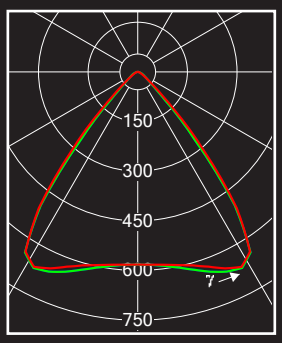

direct

Office compliant
SP532P

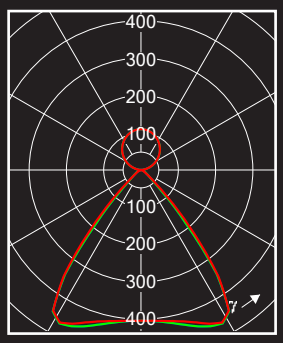

direct / indirect

Wide Beam
SP531P

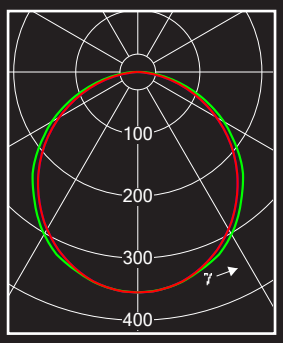

direct

Wide Beam
SP533P

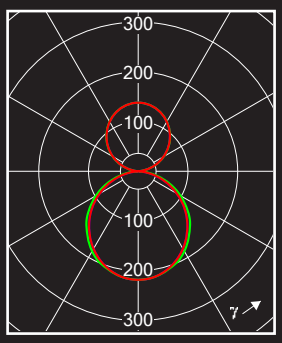

direct / indirect

TrueLine **Surface Mounted**

Office compliant
SM530C

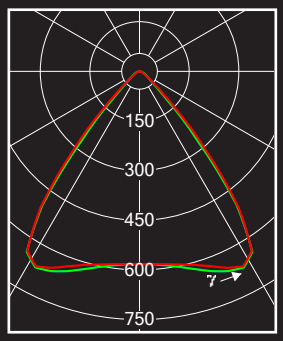

direct

Wide Beam
SM531C

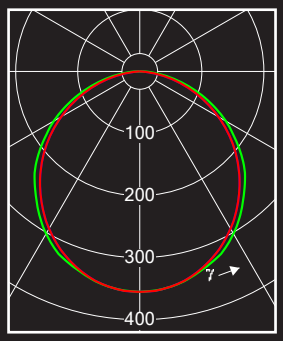

direct

Asymmetrical
SM531C

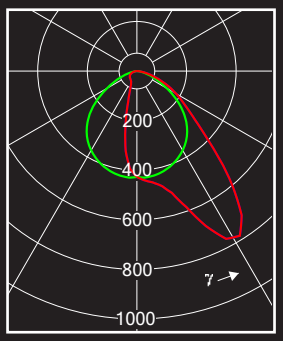

direct

TrueLine **Recessed**

Office compliant
RC530B/RC532B

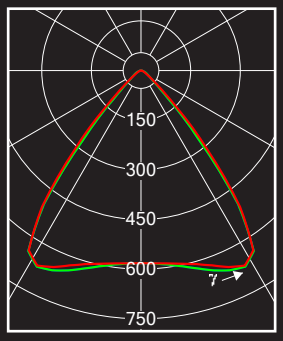

direct

Non-Office compliant
RC531B/RC533B

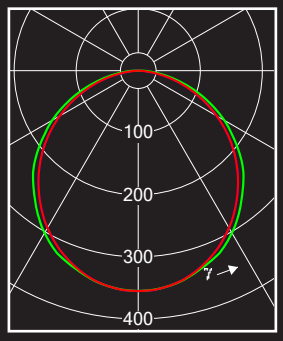

direct

Asymmetrical

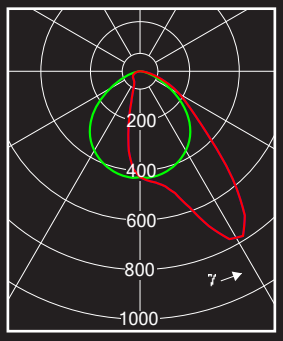

LuxSpace Elite

Professionals count on the NEW LuxSpace Elite CRI 90 Downlight

Today's businesses strive to optimise the performance of energy resources to reduce operating costs and meet sustainability targets. Energy savings are a definite priority and can be implemented in ways that still create ideal office environments in which employees can be their most productive.

Philips LuxSpace luminaires provide the perfect balance of light comfort, functional design, and energy efficiency without compromising lighting performance (colour rendering and colour uniformity).

LuxSpace offers a variety of options for creating the desired ambience, no matter the application. Additionally, the feeling of health and wellbeing in office environments is further supported through the inclusion of tunable white variants in the range.

- CRI 90 / R9 ≥ 50
- UGR <19 - low Unified Glare Rating providing light comfort
- 3 colour temperatures and 'tunable white' for perfect ambience
- Available in four cutout sizes from 100-200mm with flux of 600-2000lm provides flexibility in lighting design
- Multiple choices of control interfaces are available to make lighting control simple
- Comes pre-installed with flex & plug for ease of installation

- 3K, 3.5K, 4K CCT's
- Four cutout sizes
- Dali
- Connected Interact Pro
- Tunable White
- L85 @ 90,000hrs
- CRI 90 / R9 ≥ 50
- IP54

Receptions, Waiting Areas

Foyers and Entrance Ways

Conference & Meeting Room

Corridors, Amenities

Specifications

MODEL	LUXSPACE DOWNLIGHT (DN5xxB)				
Type	DN588B LED6	DN589B LED10	DN590B LED15	DN591B LED15	DN591B LED20
Rated Power (W)	7.7	11.7	15.8	14.7	20
System Lumens (min. lm)	648	1108	1551	1634	2139
System Efficacy (lm/W)	84.2	94.7	98.2	111.2	107.0
Colour Temperature	3000K / 3500K / 4000K, Tuneable White				
Mounting type (Cutout)	Recessed, 100mm	Recessed, 125mm, 150mm	Recessed, 125mm, 150mm	Recessed, 200mm	Recessed, 200mm
Input Voltage	220-240V, 50/60Hz				
Electrical Class	Class II				
Driver Type	DALI				
Rated Lifetime	90,000hrs/L85 (Based on TM21 Calculation)				
Electrical Connection	Flex & Plug supplied				
SDCM	SDCM < 3				
CRI	CRI 90 / R9 ≥ 50				
IP / IK rating	IP20, IP54 (available in LED10, D125 and LED15, D150)				
Unified Glare Rating	UGR 19				
Material	Housing: diecast aluminium				
Reflector	C (Facetted, specular), M (Matte, aluminium, ETO = Engineered To Order, available on request)				
Housing Colour	RAL 9003 White				
Warranty	5 Years				

Polar intensity

DN588B LED6 (D100)

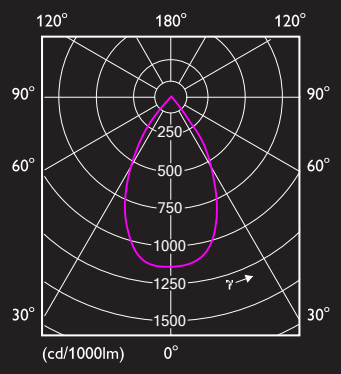

DN589B LED10 (D125)

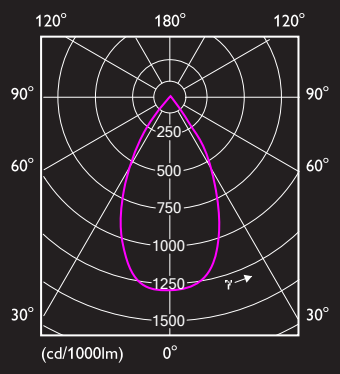

DN589B LED10 (D150)

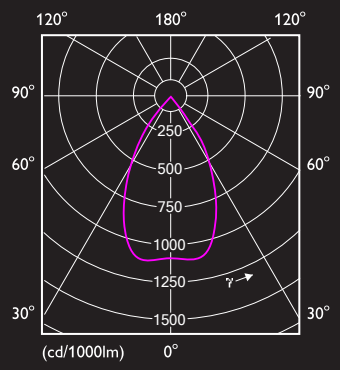

DN590B LED15 (D125)

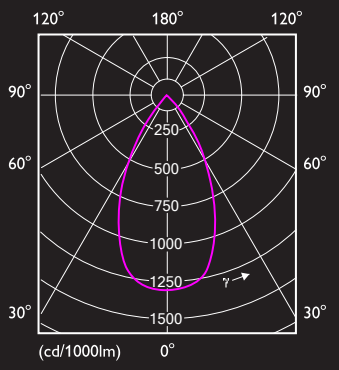

DN590B LED15 (D150)

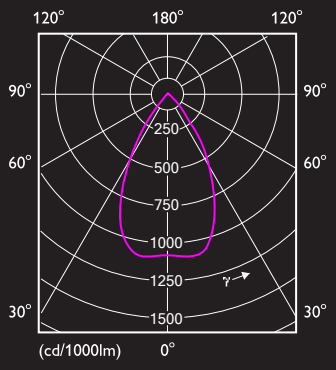

DN591B LED15 (D200)

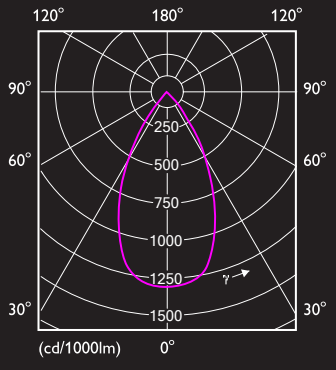

DN591B LED20 (D200)

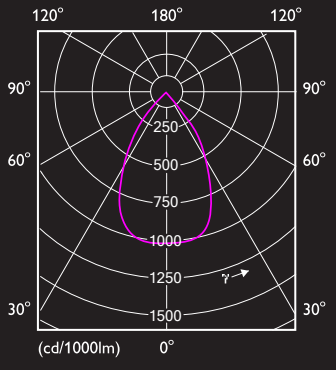

Control Options

Lighting control made easy with **Dynalite**

The Philips Dynalite control platform benefits from 30 years of experience in delivering superior lighting control solutions. Dynalite manages all DALI luminaires, Tunable White recipes to create better environments, and occupancy strategies to maximise the efficiency of workspaces. This takes place seamlessly through multiple control components and the distributed intelligence defining relationships within the system architecture. Reporting and monitoring of the network via Dynalite System Manager software not only provides insights into the operation but also DALI reporting - giving the client the necessary tools to effectively manage the intelligent building.

DALI

A reliable constant DALI Driver is supplied standard with the Elite Office family of products to provide stable lumen output and light quality that lighting specifiers and architects demand. The dimming range is between 1-100%, the nominal life is *100,000 hours, and the driver interfaces with DALI and Touch & Dim control systems. *Luxspace Downlight drivers nominal life is 50,000 hours.

Tunable **WHITE**

Human Centric Lighting can lead to enhanced concentration and increased productivity. When indoor lighting is matching natural circadian rhythms, this can enhance a sense of well-being, and Melanopic Light can be shown to improve sleep patterns. The CCT range is (2700°k to 6500°k). The Tunable White concepts are set to revolutionise the way we work.

interact Pro scalable system

Connectivity is everything...it is everywhere...it is the future

Interact Pro scalable system allows you to safeguard your day 1 investment and scales up easily with your growing business needs, all without reworking your luminaires.

- Truly straigthforward
- No restrictions on light points or building size
- Just add a gateway anytime and unlock more capabilities
- No need to change or swap sensors

Flicker and stroboscopic **effects**

Philips Office Elite products utilise industry best LED drivers that deliver flicker[1] free performance and no stroboscopic effect[2].

[1] Additionally the Dali standard specifies 8 bit (256 discrete light levels) that can introduce the appearance of Flicker during transitions (dynamic dimming). Dimming performance is improved with Elite Luminaires by the addition of further bits totalling 32,000 (15bit). These interpolated dimming levels protect against flicker artefacts during light level transitions.

[2] In the absence of compulsory standards, Philips Lighting opted to use the accepted test methods according to IEC TR 61547-1 [1] (Flicker) and IEC TR 61547-1 [5] (Stroboscopic Effect) with the following limits: PstLM ≤ 1.0 and SVM ≤ 0.4.

© 2021 Signify Holding. All rights reserved. Signify reserves the right to make changes in specifications and/or to discontinue any product at any time without notice or obligation and will not be liable for any consequences resulting from the use of this publication. Application images shown may not reflect actual products advertised.

Version: August 2022

Signify New Zealand Limited
Level 3, 123 Carlton Gore Road
Newmarket, Auckland 1023
New Zealand
T: 0800 454 448 / 0800 4 LIGHT

philips.co.nz/lighting

Signify Australia Limited
65 Epping Road, North Ryde
NSW 2113
Australia
T: 1300 110 500

philips.com.au/lighting