BN015C SET 1XTLED L600 8W 740 1 x LEDTUBE(8W/740) X

1 x 800 lm

Polar intensity diagram

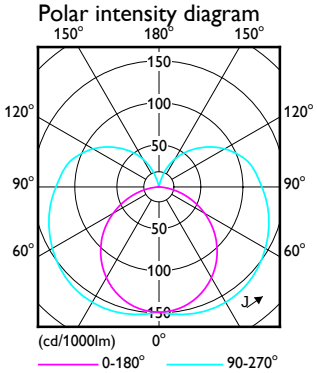

Quantity estimation diagram

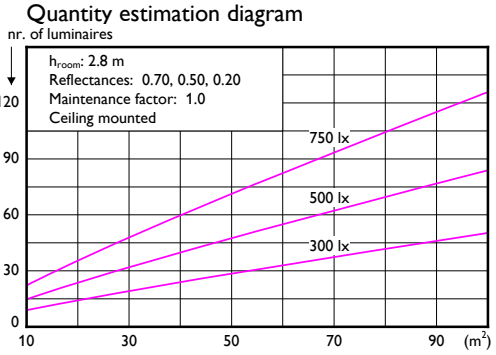

UGR diagram

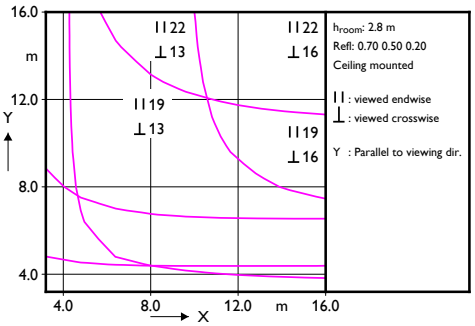

Light output ratio	1.00
Service upward	0.30
Service downward	0.70
CIE flux code	32 60 82 70 100
UGRcen (4Hx8H, 0.25H)	19

Utilisation factor table

Room Index k	Reflectances (%) for ceiling, walls and working plane (CIE)											
	0.80	0.80	0.70	0.70	0.70	0.70	0.50	0.50	0.30	0.30	0.00
	0.50	0.50	0.50	0.50	0.50	0.30	0.30	0.10	0.30	0.10	0.00
	0.30	0.10	0.30	0.20	0.10	0.10	0.10	0.10	0.10	0.10	0.00
0.60	0.38	0.36	0.36	0.35	0.34	0.27	0.25	0.20	0.22	0.18	0.14
0.80	0.48	0.45	0.45	0.44	0.42	0.35	0.31	0.26	0.28	0.24	0.19
1.00	0.55	0.51	0.52	0.50	0.49	0.41	0.37	0.32	0.33	0.29	0.23
1.25	0.63	0.58	0.59	0.57	0.55	0.47	0.43	0.38	0.39	0.34	0.28
1.50	0.69	0.63	0.65	0.62	0.60	0.52	0.47	0.42	0.43	0.39	0.31
2.00	0.79	0.70	0.74	0.70	0.67	0.60	0.54	0.50	0.49	0.45	0.37
2.50	0.85	0.75	0.80	0.75	0.71	0.65	0.59	0.55	0.54	0.50	0.42
3.00	0.90	0.79	0.84	0.79	0.75	0.69	0.63	0.59	0.57	0.54	0.45
4.00	0.96	0.83	0.90	0.84	0.79	0.75	0.68	0.64	0.61	0.58	0.49
5.00	1.00	0.86	0.94	0.88	0.82	0.78	0.71	0.68	0.64	0.62	0.52

Ceiling mounted

Luminance Table

Plane / Cone	0.0	15.0	30.0	45.0	60.0	75.0	90.0
45.0	392	430	483	537	584	617	625
50.0	379	426	492	561	617	659	668
55.0	363	422	505	590	662	712	726
60.0	344	417	523	630	721	784	801
65.0	318	414	550	689	805	883	904
70.0	285	412	593	776	926	1025	1053
75.0	241	413	672	922	1120	1251	1287
80.0	180	435	825	1183	1465	1645	1697
85.0	99	540	1195	1766	2215	2505	2585
90.0	27	1105	2673	4057	5126	5825	6024

(cd/m²)

LVC2160365 2018-12-17

BN015C SET 1XTLED L600 8W 765 1 x LEDTUBE(8W/765) X

1 x 800 lm

Polar intensity diagram

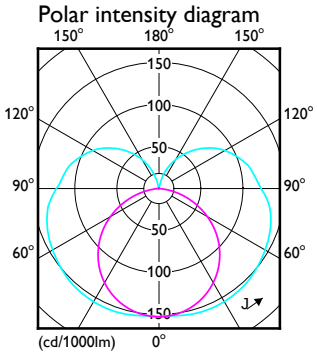

Quantity estimation diagram

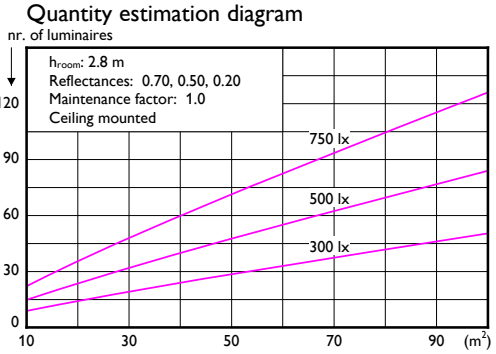

UGR diagram

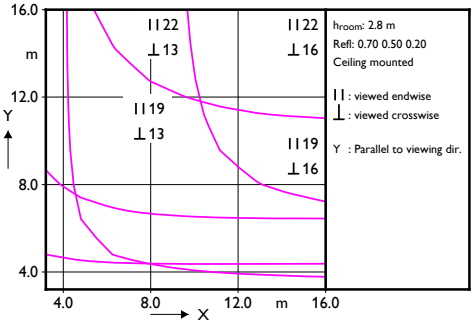

Light output ratio	1.00
Service upward	0.30
Service downward	0.70
CIE flux code	32 59 82 70 100
UGRcen (4Hx8H, 0.25H)	19

Utilisation factor table

Room Index k	Reflectances (%) for ceiling, walls and working plane (CIE)											
	0.80	0.80	0.70	0.70	0.70	0.70	0.50	0.50	0.30	0.30	0.00
	0.50	0.50	0.50	0.50	0.50	0.30	0.30	0.10	0.30	0.10	0.00
	0.30	0.10	0.30	0.20	0.10	0.10	0.10	0.10	0.10	0.10	0.00
0.60	0.38	0.36	0.36	0.35	0.35	0.27	0.25	0.20	0.22	0.18	0.14
0.80	0.48	0.45	0.45	0.44	0.42	0.35	0.31	0.26	0.28	0.24	0.19
1.00	0.55	0.51	0.52	0.50	0.49	0.41	0.37	0.32	0.33	0.29	0.23
1.25	0.63	0.58	0.59	0.57	0.55	0.47	0.43	0.38	0.38	0.34	0.28
1.50	0.69	0.63	0.65	0.62	0.60	0.52	0.47	0.42	0.43	0.38	0.31
2.00	0.78	0.70	0.73	0.70	0.67	0.60	0.54	0.50	0.49	0.45	0.37
2.50	0.85	0.75	0.79	0.75	0.71	0.65	0.59	0.55	0.53	0.50	0.41
3.00	0.90	0.79	0.84	0.79	0.75	0.69	0.63	0.59	0.57	0.53	0.45
4.00	0.96	0.83	0.90	0.84	0.79	0.75	0.68	0.64	0.61	0.58	0.49
5.00	1.01	0.86	0.94	0.88	0.82	0.78	0.71	0.68	0.64	0.62	0.52

Ceiling mounted

Luminance Table

Plane / Cone	0.0	15.0	30.0	45.0	60.0	75.0	90.0
45.0	411	434	480	530	575	605	615
50.0	399	430	489	555	611	647	660
55.0	384	426	503	587	656	702	719
60.0	364	421	523	628	718	778	799
65.0	338	416	552	689	807	884	909
70.0	303	414	596	785	939	1036	1069
75.0	254	420	680	940	1142	1269	1311
80.0	187	440	845	1214	1498	1676	1734
85.0	95	554	1224	1808	2250	2528	2618
90.0	16	1103	2668	4059	5119	5786	6002

(cd/m²)

LVC2160365 2018-12-17

BN015C SET 1XTLED L600 10W 730 1 x LEDTUBE(10W/730) X

1 x 1050 lm

Polar intensity diagram

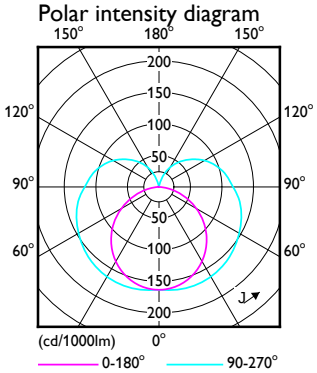

Quantity estimation diagram

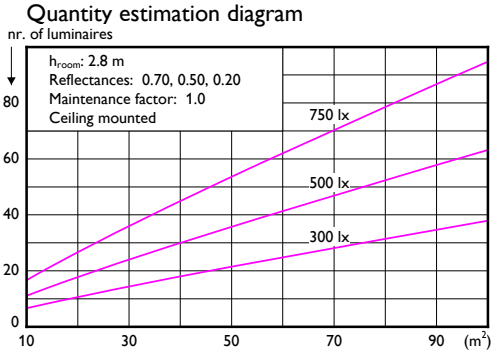

UGR diagram

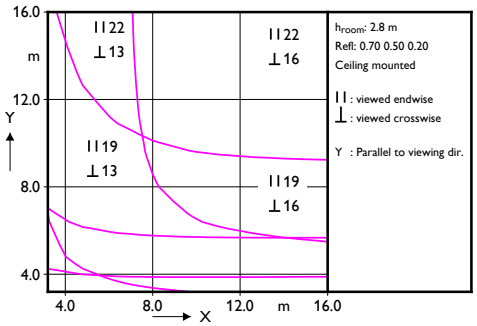

Light output ratio 1.00
Service upward 0.28
Service downward 0.72

CIE flux code 33 61 83 72 100

UGRcen (4Hx8H, 0.25H) 20

Utilisation factor table

Room Index k	Reflectances (%) for ceiling, walls and working plane (CIE)											
	0.80	0.80	0.70	0.70	0.70	0.70	0.50	0.50	0.30	0.30	0.00
	0.50	0.50	0.50	0.50	0.50	0.30	0.30	0.10	0.30	0.10	0.00
	0.30	0.10	0.30	0.20	0.10	0.10	0.10	0.10	0.10	0.10	0.00
0.60	0.39	0.37	0.37	0.36	0.35	0.28	0.25	0.21	0.23	0.19	0.15
0.80	0.48	0.45	0.46	0.44	0.43	0.35	0.32	0.27	0.29	0.25	0.20
1.00	0.56	0.52	0.53	0.51	0.49	0.42	0.38	0.33	0.35	0.30	0.25
1.25	0.64	0.58	0.60	0.58	0.56	0.48	0.44	0.39	0.40	0.35	0.29
1.50	0.70	0.63	0.66	0.63	0.60	0.53	0.48	0.43	0.44	0.40	0.33
2.00	0.79	0.71	0.74	0.71	0.67	0.61	0.56	0.51	0.51	0.47	0.39
2.50	0.86	0.76	0.80	0.76	0.72	0.66	0.61	0.56	0.55	0.51	0.43
3.00	0.91	0.79	0.85	0.80	0.76	0.70	0.64	0.60	0.58	0.55	0.47
4.00	0.97	0.84	0.91	0.85	0.80	0.76	0.69	0.66	0.63	0.60	0.51
5.00	1.01	0.87	0.95	0.88	0.83	0.79	0.72	0.69	0.66	0.63	0.54

Ceiling mounted

Luminance Table

Plane / Cone	0.0	15.0	30.0	45.0	60.0	75.0	90.0
45.0	563	601	661	729	785	826	835
50.0	544	592	671	756	826	877	889
55.0	521	584	683	791	882	945	961
60.0	493	574	705	841	957	1036	1057
65.0	457	563	738	916	1065	1164	1189
70.0	409	556	791	1032	1224	1349	1381
75.0	346	556	891	1219	1475	1640	1682
80.0	259	582	1091	1558	1918	2147	2205
85.0	143	716	1556	2304	2859	3221	3316
90.0	39	1404	3396	5161	6502	7369	7592

(cd/m²)

LVC2160365 2018-12-17

BN015C SET 1XTLED L600 10W 740 1 x LEDTUBE(10W/740) X

1 x 1050 lm

Polar intensity diagram

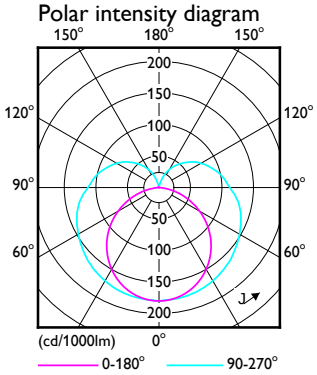

Quantity estimation diagram

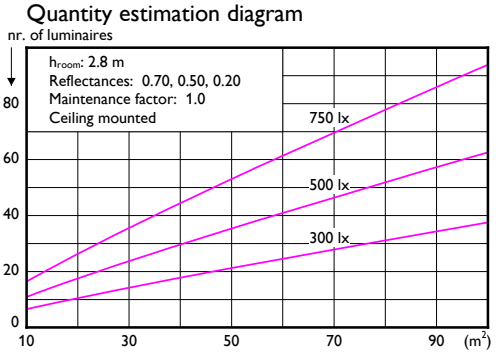

UGR diagram

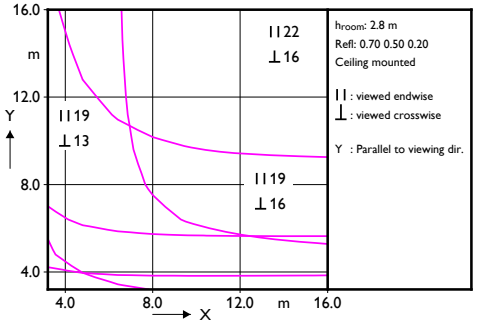

Light output ratio 1.00
Service upward 0.26
Service downward 0.74

CIE flux code 34 62 83 74 100

UGRcen (4Hx8H, 0.25H) 20

Utilisation factor table

Room Index k	Reflectances (%) for ceiling, walls and working plane (CIE)											
	0.80	0.80	0.70	0.70	0.70	0.70	0.50	0.50	0.30	0.30	0.00
	0.50	0.50	0.50	0.50	0.50	0.30	0.30	0.10	0.30	0.10	0.00
	0.30	0.10	0.30	0.20	0.10	0.10	0.10	0.10	0.10	0.10	0.00
0.60	0.39	0.37	0.37	0.36	0.36	0.28	0.26	0.21	0.24	0.20	0.16
0.80	0.49	0.46	0.46	0.45	0.44	0.36	0.33	0.28	0.30	0.26	0.21
1.00	0.57	0.53	0.54	0.52	0.50	0.42	0.39	0.34	0.36	0.31	0.26
1.25	0.64	0.59	0.61	0.59	0.56	0.49	0.45	0.40	0.41	0.37	0.31
1.50	0.71	0.64	0.67	0.64	0.61	0.54	0.49	0.44	0.45	0.41	0.34
2.00	0.80	0.71	0.75	0.72	0.68	0.62	0.57	0.52	0.52	0.48	0.41
2.50	0.86	0.76	0.81	0.77	0.73	0.67	0.61	0.57	0.56	0.53	0.45
3.00	0.91	0.80	0.86	0.81	0.76	0.71	0.65	0.61	0.60	0.56	0.48
4.00	0.97	0.84	0.91	0.86	0.81	0.76	0.70	0.66	0.64	0.61	0.53
5.00	1.02	0.87	0.95	0.89	0.84	0.80	0.73	0.70	0.67	0.64	0.56

Ceiling mounted

Luminance Table

Plane / Cone	0.0	15.0	30.0	45.0	60.0	75.0	90.0
45.0	615	639	689	750	803	843	851
50.0	593	626	694	773	841	890	898
55.0	567	613	704	806	892	955	968
60.0	536	598	722	853	964	1042	1061
65.0	497	584	751	924	1067	1165	1192
70.0	445	573	801	1034	1220	1344	1375
75.0	375	570	899	1214	1460	1621	1664
80.0	282	590	1090	1539	1884	2105	2167
85.0	156	717	1539	2243	2779	3125	3221
90.0	44	1354	3270	4944	6230	7046	7276

(cd/m²)

LVC2160365 2018-12-17

BN015C SET 1XTLED L600 10W 765 1 x LEDTUBE(10W/765) X

1 x 1050 lm

Polar intensity diagram

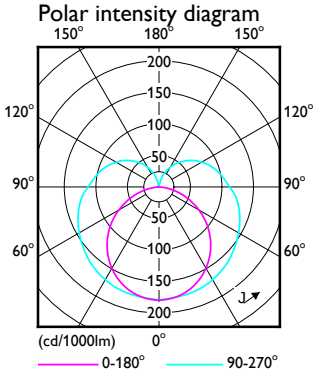

Quantity estimation diagram

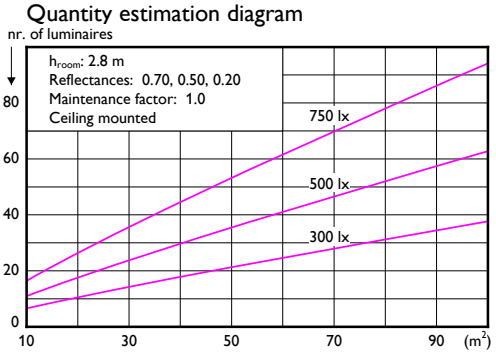

UGR diagram

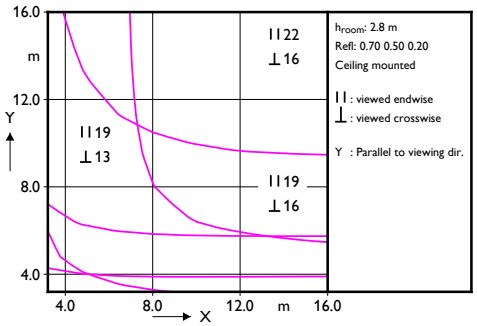

Light output ratio 1.00
Service upward 0.27
Service downward 0.73

CIE flux code 34 62 83 73 100

UGRcen (4Hx8H, 0.25H) 20

Utilisation factor table

Room Index k	Reflectances (%) for ceiling, walls and working plane (CIE)											
	0.80	0.80	0.70	0.70	0.70	0.70	0.50	0.50	0.30	0.30	0.00
	0.50	0.50	0.50	0.50	0.50	0.30	0.30	0.10	0.30	0.10	0.00
	0.30	0.10	0.30	0.20	0.10	0.10	0.10	0.10	0.10	0.10	0.00
0.60	0.39	0.37	0.37	0.36	0.36	0.28	0.26	0.21	0.24	0.20	0.16
0.80	0.49	0.46	0.46	0.45	0.44	0.36	0.33	0.28	0.30	0.26	0.21
1.00	0.57	0.52	0.53	0.52	0.50	0.42	0.39	0.34	0.35	0.31	0.26
1.25	0.64	0.59	0.61	0.58	0.56	0.49	0.45	0.39	0.41	0.36	0.30
1.50	0.70	0.64	0.66	0.64	0.61	0.54	0.49	0.44	0.45	0.41	0.34
2.00	0.80	0.71	0.75	0.71	0.68	0.61	0.56	0.52	0.51	0.47	0.40
2.50	0.86	0.76	0.81	0.77	0.73	0.67	0.61	0.57	0.56	0.52	0.44
3.00	0.91	0.80	0.85	0.80	0.76	0.71	0.65	0.61	0.59	0.56	0.48
4.00	0.97	0.84	0.91	0.86	0.80	0.76	0.70	0.66	0.64	0.61	0.52
5.00	1.02	0.87	0.95	0.89	0.83	0.79	0.73	0.70	0.66	0.64	0.55

Ceiling mounted

Luminance Table

Plane / Cone	0.0	15.0	30.0	45.0	60.0	75.0	90.0
45.0	610	628	682	742	797	834	845
50.0	587	615	685	764	833	879	893
55.0	561	601	694	796	881	941	959
60.0	528	586	712	840	951	1026	1048
65.0	487	572	739	909	1052	1144	1173
70.0	433	560	789	1018	1203	1320	1356
75.0	362	557	885	1199	1442	1594	1641
80.0	264	576	1078	1524	1865	2077	2142
85.0	133	705	1531	2238	2769	3099	3200
90.0	21	1357	3282	4964	6231	7022	7264

(cd/m2)

LVC2160365 2018-12-17

BN015C SET 1XTLED L1200 16W 74 1 x LEDTUBE(16W/740) X

1 x 1600 lm

Polar intensity diagram

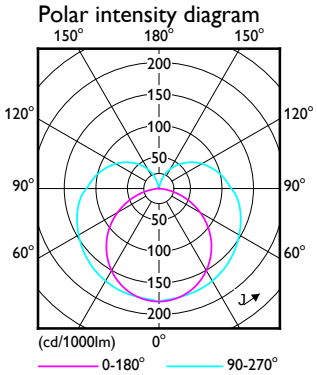

Quantity estimation diagram

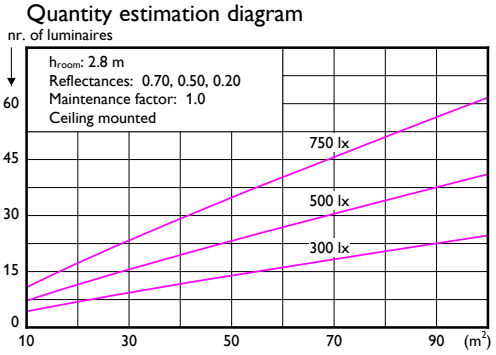

UGR diagram

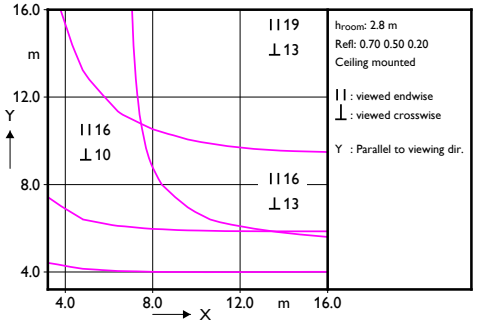

Light output ratio 1.00
Service upward 0.26
Service downward 0.74

CIE flux code 34 62 83 74 100

UGRcen (4Hx8H, 0.25H) 17

Utilisation factor table

Room Index k	Reflectances (%) for ceiling, walls and working plane (CIE)											
	0.80	0.80	0.70	0.70	0.70	0.70	0.50	0.50	0.30	0.30	0.00
	0.50	0.50	0.50	0.50	0.50	0.30	0.30	0.10	0.30	0.10	0.00
	0.30	0.10	0.30	0.20	0.10	0.10	0.10	0.10	0.10	0.10	0.00
0.60	0.39	0.37	0.37	0.36	0.36	0.28	0.26	0.21	0.24	0.20	0.16
0.80	0.49	0.46	0.46	0.45	0.44	0.36	0.33	0.28	0.30	0.26	0.21
1.00	0.57	0.53	0.54	0.52	0.50	0.42	0.39	0.34	0.36	0.31	0.26
1.25	0.64	0.59	0.61	0.59	0.56	0.49	0.45	0.40	0.41	0.37	0.31
1.50	0.71	0.64	0.67	0.64	0.61	0.54	0.49	0.44	0.45	0.41	0.34
2.00	0.80	0.71	0.75	0.72	0.68	0.62	0.57	0.52	0.52	0.48	0.41
2.50	0.86	0.76	0.81	0.77	0.73	0.67	0.61	0.57	0.56	0.53	0.45
3.00	0.91	0.80	0.86	0.81	0.76	0.71	0.65	0.61	0.60	0.56	0.48
4.00	0.97	0.84	0.91	0.86	0.81	0.76	0.70	0.66	0.64	0.61	0.53
5.00	1.02	0.87	0.95	0.89	0.84	0.80	0.73	0.70	0.67	0.64	0.56

Ceiling mounted

Luminance Table

Plane / Cone	0.0	15.0	30.0	45.0	60.0	75.0	90.0
45.0	231	236	255	278	297	311	315
50.0	225	233	259	289	314	331	337
55.0	217	230	265	304	336	357	364
60.0	207	227	274	325	366	393	402
65.0	193	225	290	357	409	445	456
70.0	176	224	315	405	476	522	537
75.0	151	228	359	489	585	648	667
80.0	115	246	456	649	791	881	911
85.0	65	327	713	1052	1299	1457	1508
90.0	15	1022	2477	3768	4715	5328	5521

(cd/m2)

LVC2160365 2018-12-17

BN015C SET 1XTLED L1200 16W 76 1 x LEDTUBE(16W/765) X

1 x 1600 lm

Polar intensity diagram

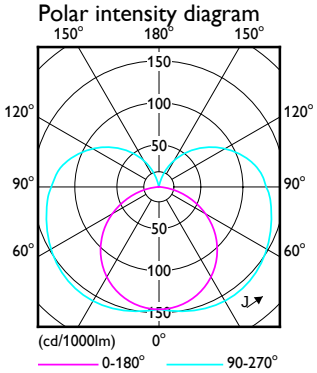

Quantity estimation diagram

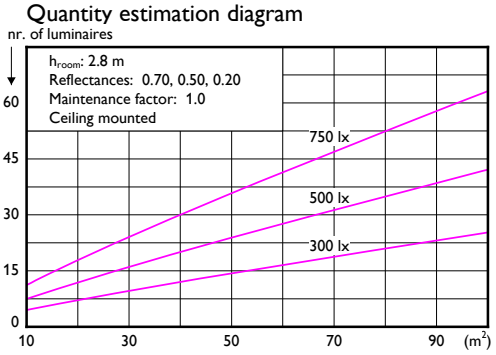

UGR diagram

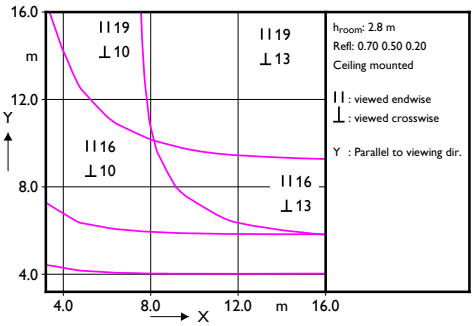

Light output ratio 1.00
Service upward 0.29
Service downward 0.71

CIE flux code 31 59 81 71 100

UGRcen (4Hx8H, 0.25H) 17

Utilisation factor table

Room Index k	Reflectances (%) for ceiling, walls and working plane (CIE)										
	0.80	0.80	0.70	0.70	0.70	0.70	0.50	0.50	0.30	0.30	0.00
	0.50	0.50	0.50	0.50	0.50	0.30	0.30	0.10	0.30	0.10	0.00
	0.30	0.10	0.30	0.20	0.10	0.10	0.10	0.10	0.10	0.10	0.00
0.60	0.38	0.36	0.36	0.35	0.34	0.26	0.24	0.19	0.22	0.18	0.14
0.80	0.47	0.44	0.45	0.43	0.42	0.34	0.31	0.26	0.28	0.24	0.19
1.00	0.55	0.51	0.52	0.50	0.48	0.40	0.37	0.32	0.33	0.29	0.23
1.25	0.63	0.57	0.59	0.57	0.55	0.47	0.43	0.37	0.38	0.34	0.28
1.50	0.69	0.62	0.65	0.62	0.59	0.52	0.47	0.42	0.43	0.38	0.31
2.00	0.78	0.70	0.73	0.70	0.66	0.60	0.54	0.49	0.49	0.45	0.37
2.50	0.85	0.75	0.79	0.75	0.71	0.65	0.59	0.55	0.53	0.50	0.41
3.00	0.89	0.78	0.84	0.79	0.74	0.69	0.63	0.59	0.57	0.53	0.45
4.00	0.96	0.83	0.90	0.84	0.79	0.74	0.68	0.64	0.61	0.58	0.49
5.00	1.00	0.86	0.94	0.87	0.82	0.78	0.71	0.68	0.64	0.62	0.52

Ceiling mounted

Luminance Table

Plane / Cone	0.0	15.0	30.0	45.0	60.0	75.0	90.0
45.0	193	211	237	264	286	301	307
50.0	189	211	244	278	306	325	332
55.0	183	211	254	297	332	355	363
60.0	175	212	267	322	366	394	404
65.0	164	214	286	356	412	450	463
70.0	149	219	315	408	485	534	551
75.0	129	228	363	498	603	670	693
80.0	99	249	468	671	828	926	960
85.0	57	338	751	1115	1393	1566	1625
90.0	19	1134	2738	4149	5224	5895	6126

(cd/m²)

LVC2160365 2018-12-17

BN015C SET 1XTLED L1200 20W 73 1 x LEDTUBE(20W/730) X

1 x 2100 lm

Polar intensity diagram

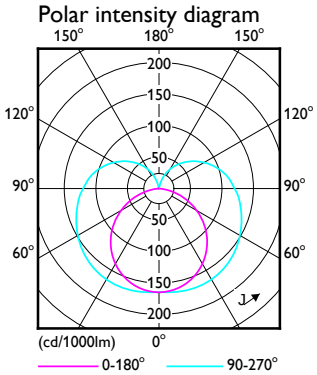

Quantity estimation diagram

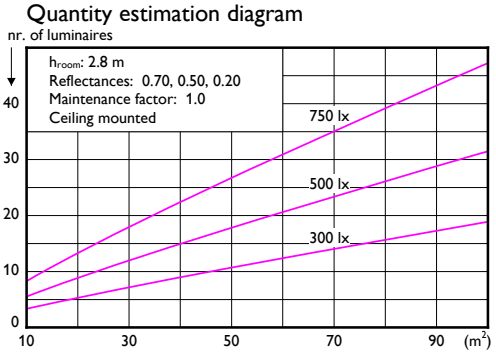

UGR diagram

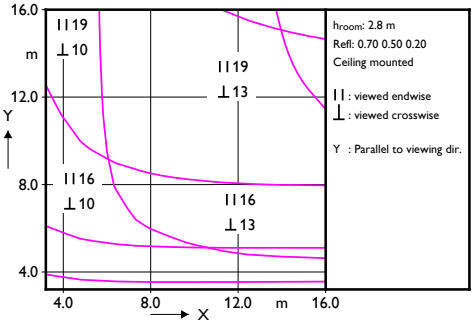

Light output ratio 1.00
Service upward 0.27
Service downward 0.73

CIE flux code 33 61 83 73 100

UGRcen (4Hx8H, 0.25H) 18

Utilisation factor table

Room Index k	Reflectances (%) for ceiling, walls and working plane (CIE)										
	0.80	0.80	0.70	0.70	0.70	0.70	0.50	0.50	0.30	0.30	0.00
	0.50	0.50	0.50	0.50	0.50	0.30	0.30	0.10	0.30	0.10	0.00
	0.30	0.10	0.30	0.20	0.10	0.10	0.10	0.10	0.10	0.10	0.00
0.60	0.39	0.37	0.37	0.36	0.35	0.28	0.25	0.21	0.23	0.19	0.15
0.80	0.48	0.45	0.46	0.44	0.43	0.35	0.32	0.27	0.30	0.25	0.20
1.00	0.56	0.52	0.53	0.51	0.50	0.42	0.38	0.33	0.35	0.30	0.25
1.25	0.64	0.59	0.60	0.58	0.56	0.48	0.44	0.39	0.40	0.36	0.30
1.50	0.70	0.64	0.66	0.63	0.61	0.53	0.49	0.44	0.44	0.40	0.33
2.00	0.79	0.71	0.75	0.71	0.68	0.61	0.56	0.51	0.51	0.47	0.40
2.50	0.86	0.76	0.81	0.76	0.72	0.66	0.61	0.57	0.55	0.52	0.44
3.00	0.91	0.79	0.85	0.80	0.76	0.70	0.65	0.61	0.59	0.56	0.47
4.00	0.97	0.84	0.91	0.85	0.80	0.76	0.69	0.66	0.63	0.61	0.52
5.00	1.01	0.87	0.95	0.89	0.83	0.79	0.73	0.70	0.66	0.64	0.55

Ceiling mounted

Luminance Table

Plane / Cone	0.0	15.0	30.0	45.0	60.0	75.0	90.0
45.0	279	295	327	360	390	408	415
50.0	271	293	334	376	413	436	444
55.0	260	290	343	397	443	472	482
60.0	248	288	357	425	483	519	533
65.0	232	287	378	466	541	587	604
70.0	210	288	410	530	629	690	712
75.0	180	295	470	640	774	856	886
80.0	138	319	598	852	1051	1171	1214
85.0	78	428	942	1395	1745	1955	2030
90.0	23	1380	3354	5106	6446	7263	7552

(cd/m²)

LVC2160365 2018-12-17

BN015C SET 1XTLED L1200 20W 74 1 x LEDTUBE(20W/740) X

1 x 2100 lm

Polar intensity diagram

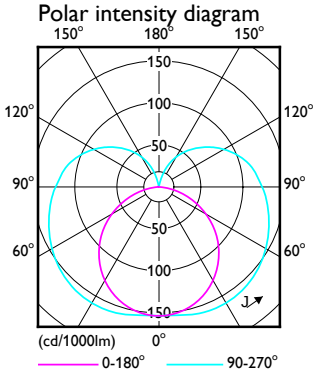

Quantity estimation diagram

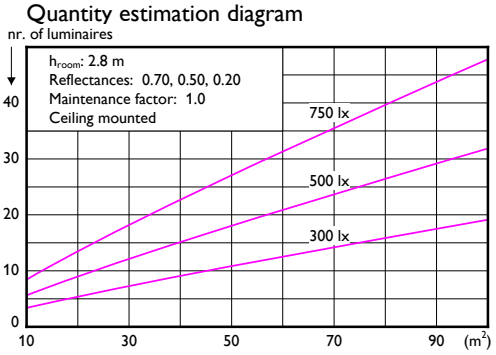

UGR diagram

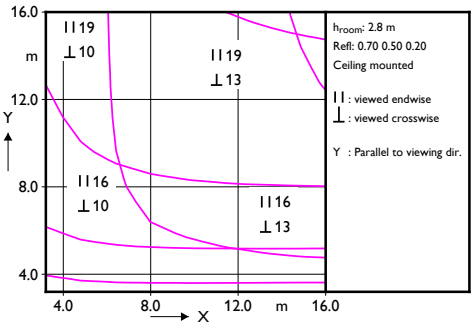

Light output ratio 1.00
Service upward 0.29
Service downward 0.71

CIE flux code 32 60 82 71 100

UGRcen (4Hx8H, 0.25H) 18

Utilisation factor table

Room Index k	Reflectances (%) for ceiling, walls and working plane (CIE)											
	0.80	0.80	0.70	0.70	0.70	0.70	0.50	0.50	0.30	0.30	0.00
	0.50	0.50	0.50	0.50	0.50	0.30	0.30	0.10	0.30	0.10	0.00
	0.30	0.10	0.30	0.20	0.10	0.10	0.10	0.10	0.10	0.10	0.00
0.60	0.38	0.36	0.36	0.35	0.35	0.27	0.25	0.20	0.22	0.18	0.14
0.80	0.48	0.45	0.45	0.44	0.42	0.35	0.32	0.26	0.29	0.24	0.19
1.00	0.55	0.51	0.52	0.51	0.49	0.41	0.37	0.32	0.34	0.29	0.24
1.25	0.63	0.58	0.59	0.57	0.55	0.47	0.43	0.38	0.39	0.35	0.28
1.50	0.69	0.63	0.65	0.62	0.60	0.52	0.48	0.43	0.43	0.39	0.32
2.00	0.79	0.70	0.74	0.70	0.67	0.60	0.55	0.50	0.50	0.46	0.38
2.50	0.85	0.75	0.80	0.75	0.72	0.66	0.60	0.55	0.54	0.50	0.42
3.00	0.90	0.79	0.84	0.79	0.75	0.69	0.63	0.59	0.57	0.54	0.45
4.00	0.96	0.83	0.90	0.84	0.79	0.75	0.68	0.65	0.62	0.59	0.50
5.00	1.01	0.86	0.94	0.88	0.82	0.78	0.71	0.68	0.65	0.62	0.53

Ceiling mounted

Luminance Table

Plane / Cone	0.0	15.0	30.0	45.0	60.0	75.0	90.0
45.0	260	277	312	348	378	397	404
50.0	252	276	319	365	403	427	435
55.0	243	275	330	387	435	464	474
60.0	232	274	345	418	477	514	527
65.0	217	275	367	461	538	585	601
70.0	197	278	403	528	628	689	710
75.0	169	287	466	640	777	860	887
80.0	130	315	595	858	1060	1180	1220
85.0	74	428	948	1414	1771	1984	2055
90.0	17	1422	3439	5250	6640	7465	7736

(cd/m²)

LVC2160365 2018-12-17

BN015C SET 1XTLED L1200 20W 76 1 x LEDTUBE(20W/765) X

1 x 2100 lm

Polar intensity diagram

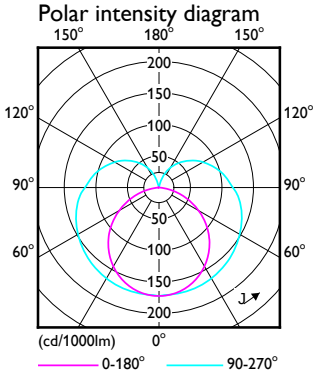

Quantity estimation diagram

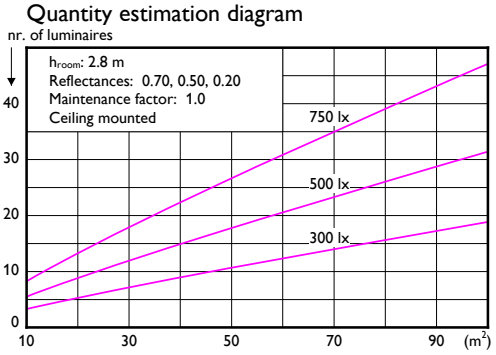

UGR diagram

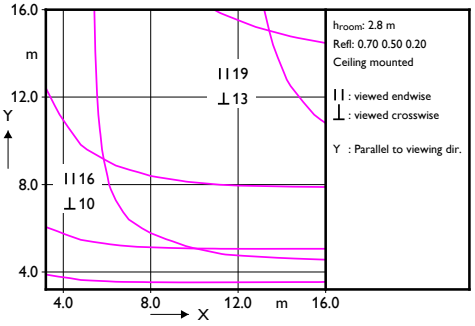

Light output ratio 1.00
Service upward 0.26
Service downward 0.74

CIE flux code 33 61 83 74 100

UGRcen (4Hx8H, 0.25H) 18

Utilisation factor table

Room Index k	Reflectances (%) for ceiling, walls and working plane (CIE)											
	0.80	0.80	0.70	0.70	0.70	0.70	0.50	0.50	0.30	0.30	0.00
	0.50	0.50	0.50	0.50	0.50	0.30	0.30	0.10	0.30	0.10	0.00
	0.30	0.10	0.30	0.20	0.10	0.10	0.10	0.10	0.10	0.10	0.00
0.60	0.39	0.37	0.37	0.36	0.35	0.28	0.26	0.21	0.23	0.19	0.16
0.80	0.48	0.45	0.46	0.45	0.43	0.35	0.33	0.27	0.30	0.25	0.21
1.00	0.56	0.52	0.53	0.51	0.50	0.42	0.38	0.33	0.35	0.31	0.25
1.25	0.64	0.59	0.60	0.58	0.56	0.48	0.44	0.39	0.40	0.36	0.30
1.50	0.70	0.64	0.66	0.63	0.61	0.53	0.49	0.44	0.45	0.40	0.34
2.00	0.80	0.71	0.75	0.71	0.68	0.61	0.56	0.51	0.51	0.47	0.40
2.50	0.86	0.76	0.81	0.77	0.73	0.67	0.61	0.57	0.56	0.52	0.45
3.00	0.91	0.80	0.85	0.80	0.76	0.71	0.65	0.61	0.59	0.56	0.48
4.00	0.97	0.84	0.91	0.86	0.81	0.76	0.70	0.66	0.64	0.61	0.52
5.00	1.02	0.87	0.95	0.89	0.84	0.79	0.73	0.70	0.67	0.64	0.55

Ceiling mounted

Luminance Table

Plane / Cone	0.0	15.0	30.0	45.0	60.0	75.0	90.0
45.0	292	303	330	360	388	406	411
50.0	284	299	336	374	412	434	441
55.0	273	296	344	395	443	471	479
60.0	261	293	358	425	484	520	531
65.0	244	290	379	468	544	590	604
70.0	222	290	414	533	634	695	713
75.0	191	299	475	646	781	863	888
80.0	147	327	606	859	1059	1176	1213
85.0	84	437	949	1393	1743	1947	2011
90.0	19	1378	3325	5025	6356	7141	7404

(cd/m²)

LVC2160365 2018-12-17