UNIBollard 悠奕草坪灯

BCP310/311/312LED

Mounting instruction/ 安装说明

IEC 60598 | GB 7000 | IP65 | IK06 | t_a35°C

Type number 系列型号	Control method 控制方式	kg	LEDs QTY LED颗粒数	CCT/color 色温/颜色	Typical Power 典型功率	Voltage 输入电压	Surge rating 浪涌
BCP 310 LED	ON/OFF	1.45	30	2700K 3000K 4000K 6500K	15W	100-240VAC	1KV/2KV
BCP 311 LED	ON/OFF	2.5	30		15W	100-240VAC	1KV/2KV
BCP 312 LED	ON/OFF	3.5	30		15W	100-240VAC	1KV/2KV

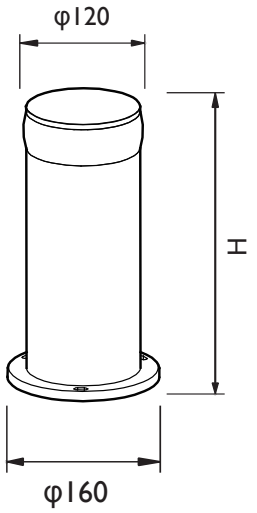

Unit:mm
单位:mm

Type number 系列型号	H
BCP 310 LED	300
BCP 311 LED	600
BCP 312 LED	1200

1 Turn off the power and put up the warning signs

关掉电源，并放好警示牌

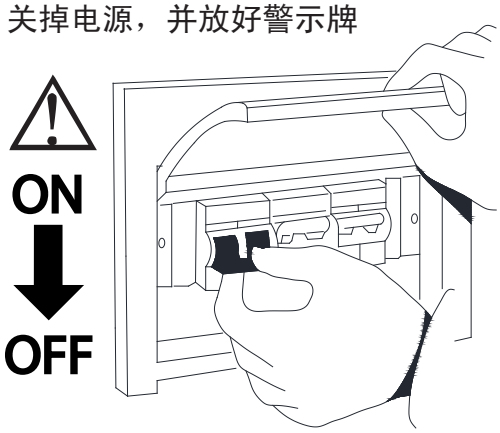

2

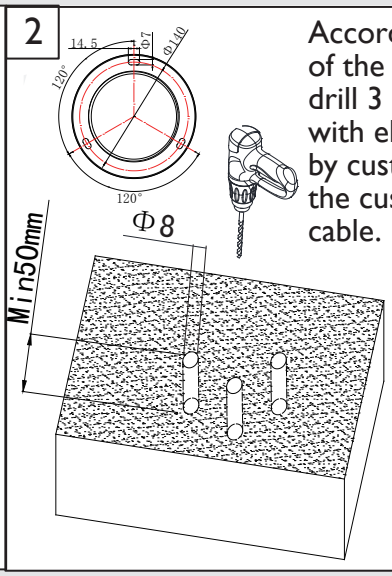

According to the position of the lamp mounting holes, drill 3 holes for fixing lamps with electric drill (prepared by customer) centering on the customer reserved cable.

根据灯具安装孔位置，以客户预留线为中心用电钻（客户自备）钻3个固定灯具使用的孔。

Signify Luminaires (Shanghai) Co., Ltd.
2F, Building 6, No.1805 Huyi Highway, Malu Town, Jiading District, Shanghai City, P.R.china
Postalcode: 201801
昕诺飞灯具（上海）有限公司
上海市嘉定区马陆镇沪宜公路1805号6幢二层
邮编：201801

PHILIPS

Philips and the Philips shield emblem are registered trademarks of Koninklijke Philips N.V.

3

Open the waterproof connector, and wire the cables according to internal machting colors. Torsion value of waterproof wiring pipe is 5 nm.

拧开防水接线管，按照接线柱内部对应颜色，接好电线。防水接线管扭力值为5NM。

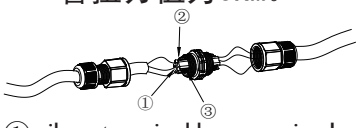

① silver terminal:brown wire L
银色接线柱：棕色线 L
② black terminal:blue wire N
黑色接线柱：蓝色线 N
③ copper termnial:yellow-green grounding wire ⏚
黄铜色接线柱：黄绿线 ⏚

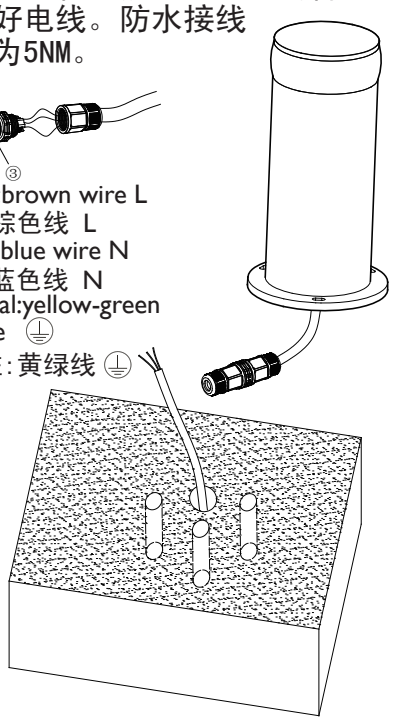

4

Put plastic expansion bolts into the holes drilled in advance, and the lamp is placed in the corresponding position of the plastic expansion bolts .

将膨胀螺钉放入预先钻的孔内，灯具放在对应的膨胀螺钉位置上

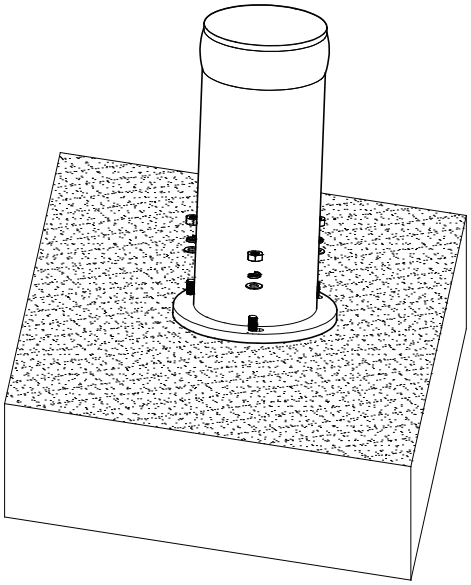

5

Use 10# wrench (prepared by customer) to tighten the hexagonal nut to ensure that the lamp does not shake.

使用10#扳手（客户自备）拧紧六角螺母，保证灯具不会摇晃

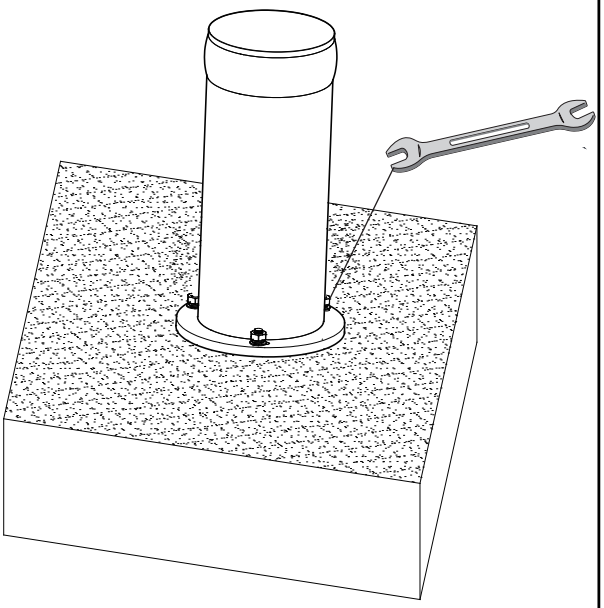

6

After checking the wiring, turn on the power and check if the fixture works properly. If there is any problem,please contact the seller for timely treatment.

检查接线没问题后，打开电源，检查灯具是否正常，如有任何问题，请与销售方联系，及时处理。

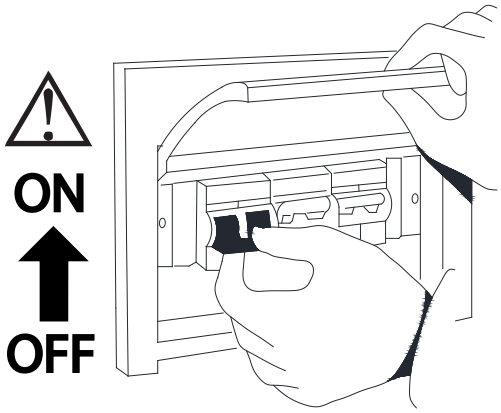

1. Please read this instructions and understand the items properly, and install the luminaires per this instructions.
   安装灯具前请务必仔细阅读并理解本说明书，并按照本说明书规定要求安装。
2. Lamps shall be installed by a qualified electrician and wiring shall be in accordance with IEE electrical standards or national standards.
   灯具应由有资格的电工安装，接线要符合IEE电气标准或国家标准。
3. When multiple lamps are connected to the power bus, the diameter of the bus wire should be considered and the cable used should be acceptable.The current shall be greater than the sum of the rated current of all lamps.
   当多个灯具并接在电源总线时，应考虑总线电线的线径大小，使用的电缆线可承的电流要大于所有灯具额定电流之和。
4. When distributing electricity, pay attention to the specifications of the selected leakage protection switch, and take into account the lamp power supply, cable length and moisture environmental factors that will increase the leakage current.
   配电时要注意，所选漏保开关的规格，并且要考虑到灯具电源，电缆长度及潮湿的环境因素都会使漏电电流增大。
5. Power distribution should take into account the surge of currect which air switch can withstand, to leave enough margin, it is recommended to start in stages.
   配电时要考虑空开所能承受的浪涌电流，要留有足够的余量，建议分级启动。
6. Wiring method is dependent on local electrical regulations. Usually, use of screw type lead junction connection wire or screw terminal block.
   接线方式取决于当地的电气法规与规定，一般是使用螺纹旋紧型导结连接线或螺钉接线端子。
7. If the external flexible cable or cord of this luminaire is damaged, it shall be exclusively replaced by the manufacturer or a similar qualified person in order to avoid a hazard.
   Y型连接：如果此灯具的外部线缆或软线损坏，该线要用制造商或其服务代理商或有类似资格的人更换，以避免发生危险。
8. Do not energize during wiring, and put a warning board at the power off switch.
   接线过程请勿通电，并且要在断电开关处放一警示牌。
9. No hot plug, no live operation.
   不可热拔插，不可带电操作。
10. The lighting source of lamps is not replaceable.When the light source reaches the final service life, the entire lamp shall be replaced.
    灯具的光源是不可替换。当光源达到最终使用寿命，需更换整个灯具。
11. Lamps and lanterns should be examed and cleaned regularly.
    灯具要定期检测，定期清洗。

产品中有害物质的名称及含量

部件名称	有害物质					
	铅 (Pb)	汞 (Hg)	镉 (Cd)	六价铬 (Cr(VI))	多溴联苯 (PBB)	多溴二苯醚 (PBDE)
LED灯板/光源	○	○	○	○	○	○
驱动器(板)，铜制及电子零部件	×	○	○	○	○	○
透镜光学部件	○	○	○	○	○	○
外壳及其它零部件	○	○	○	○	○	○

本表格依据SJ/T 11364的规定编制

○:表示该有害物质在该部件所有均质材料中的含量均在GB/T 26572规定的限量要求以下。

×:表示该有害物质至少在该部件所的某一均质材料中的含量超出GB/T 26572规定的限量要求。

Applicable to China Only

Disclaimer
免责条款

1. Please use and install the luminaires correctly according to the protection grade and other precautions marked in the [installation instructions] of the product. The luminaires shall not be immersed in water , The manufacturer shall not be liable for the failure of the luminaires protection caused thereby.
   请根据本产品的【安装说明】中标注的防护等级和其它注意事项，正确使用和安装灯具，此灯具不可处于浸水的环境中，由此导致的灯具防护失效，生产商不承担责任。
2. The manufacturer shall not be liable for any damage, personal injury or loss of property resulting from failure to install or operate the products as required.
   如不按照要求安装或操作，由此导致的产品损坏、人员伤害、其他财产损失，生产商不承担责任。
3. The manufacturer shall not be liable for any damage, personal injury or other property loss caused by improper use or modification of the product structure.
   由使用不当或自行更改产品结构而导致的产品损坏、人员伤害、其他财产损失，生产商不承担责任。
4. The luminaire should avoid storage and usage in such a surroundings or an occasion that is with corrosion or hazardous gases like sulfide, halide, phthalate and so on.
   灯具应该避免在有腐蚀或有害气体物存在的环境或场合储存或使用，像硫化物，卤化物，邻苯二甲酸酯等。
5. The PC material cannot be used in such a ambience that is with ethylamine, tetra-dichloroethylene, which is corrosion or hazardous to PC material and so on.
   灯具PC材料不能被使用在含乙胺，四氯乙烯等对PC材料有腐蚀或有害的环境使用。
6. For periodically cleaning maintenance of luminaire which PC material is exposed to outside, Acid solution or alkali solution cannot be used as a cleaning solution to wash outside surface of luminaire.
   为了定期的清洗维护灯具的目的，对于PC材料暴露在灯具外面的，酸性或碱性溶液不能被用来作为冲洗灯具的外表面。

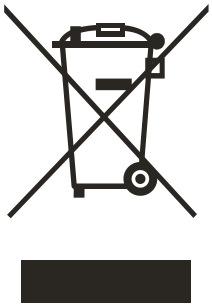

This marking indicates that this product should not be disposed with other household wastes throughout the EU. To prevent possible harm to the environment or human health from uncontrolled waste disposal, recycle it responsibly to promote the sustainable reuse of material resources. To return your used device, please use the return and collection systems or contact the retailer where the product was purchased. They can take this product for environmental safe recycling.

此标记表示本产品不应与欧盟其他家庭垃圾一起处理。为了防止不受控制的废物处理可能对环境或人类健康造成危害，负责任地回收废物，促进物质资源的可持续再利用。若要退回使用过的设备，请使用退货系统或联系购买产品的零售商。他们可以把这个产品进行环保安全回收。