UNIBollard 悠奕草坪灯

BCP210/211/212 LED

Mounting instruction/安装说明

IEC 60598 | GB 7000 | IP65 | IK06 | t_a35°C

Type number 系列型号	Control method 控制方式	kg	LEDs QTY LED颗粒数	CCT/color 色温/颜色	Typical Power 典型功率	Voltage 输入电压	Surge rating 浪涌
BCP210 LED	ON/OFF	2.1	24	2700K 3000K 4000K 6500K	13W	100-240VAC	2KV/4KV
BCP211 LED	ON/OFF	2.5	24		13W	100-240VAC	2KV/4KV
BCP212 LED	ON/OFF	4.3	24		13W	100-240VAC	2KV/4KV

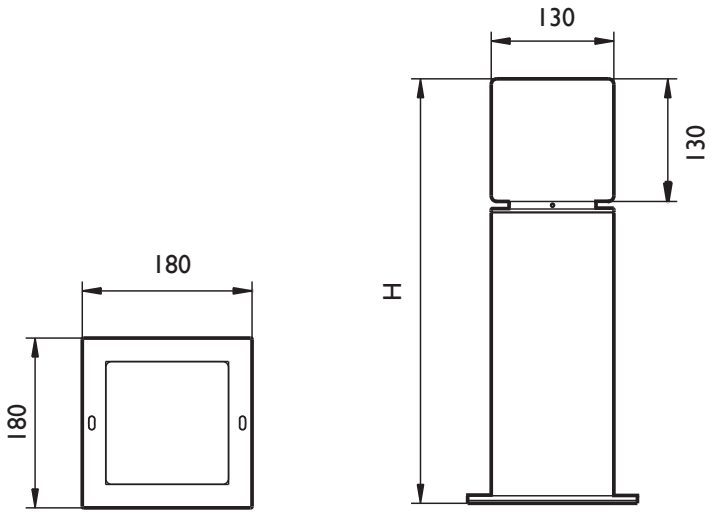

Type number 系列型号	H
BCP210 LED	450
BCP211 LED	600
BCP212 LED	1200

Unit:mm

单位:mm

Signify Luminaires (Shanghai) Co., Ltd.
2F, Building 6, No.1805 Huyi Highway, Malu Town, Jiading District, Shanghai City, P.R.china
Postalcode: 201801
昕诺飞灯具（上海）有限公司
上海市嘉定区马陆镇沪宜公路1805号6幢二层
邮编：201801

PHILIPS

Philips and the Philips shield emblem are registered trademarks of Koninklijke Philips N.V.

1

Please turn off the power before installation.
安装前请先关闭电源

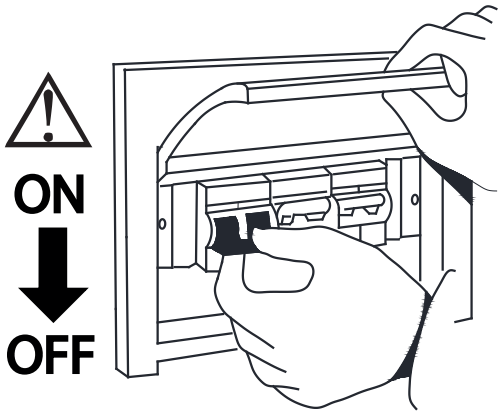

2

1. Put the plastic lamp shade into the round groove in the head of lamp body;
把塑料灯罩放入灯体头部圆槽内；
2. Use two M4X6 inner hexagon set screws and matching spanner to lock the shade and body tightly from the screw holes between them.
使用两个M4X6内六角紧定螺钉和配套扳手从灯罩与灯体之间螺孔处锁入使其固定牢固。
Adjust the angle of lamp shade and lamp body before locking, matching screws and wrenches are in the accessory package.
注意锁紧前调整好灯罩与灯体的角度，配套螺钉和扳手在附件包内。

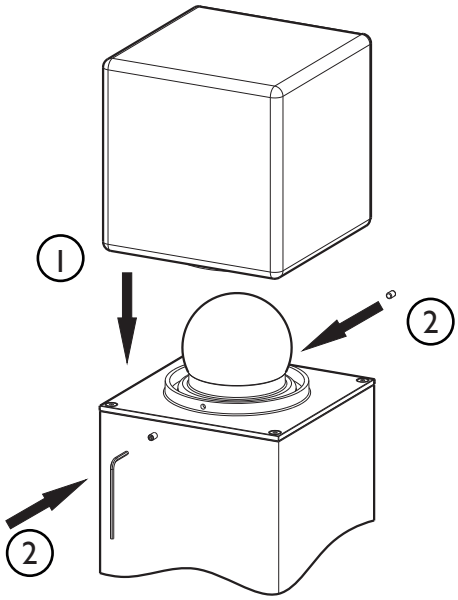

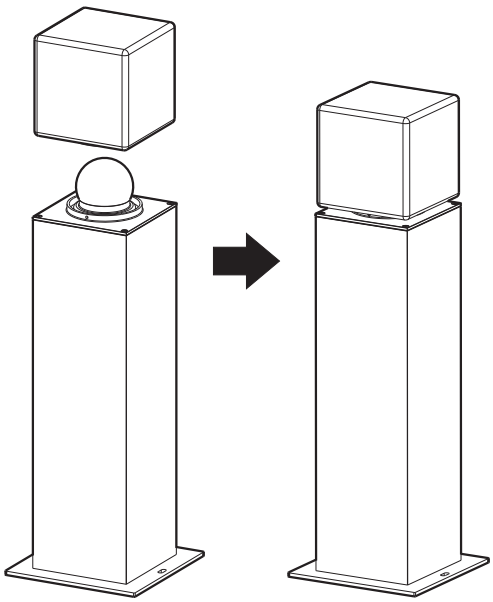

3

1. Drilling two ϕ12mm round holes on cement floor,the hole spacing is 160mm and the hole depth is more than 60mm;
在水泥地上钻2个12mm的圆孔，孔间距为160mm，孔深度大于60mm；
2. Fill the plastic expansion bolts, in accessory package, into the holes and the surface should not be exposed.
使用附件包内的塑料膨胀，敲入孔中，地表不得有外露现象。

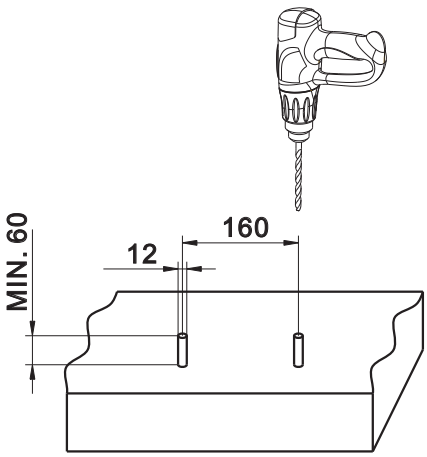

4

1.Take out the EVA pad and put the prepared power cord throught it in the middle;
取出EVA垫并从中穿入地上的预埋电源线；

2.Take out the waterproof wiring pipe from the lamp, unscrew the wiring pipe and the cap of the unwired end;
从灯体底孔中取出防水接线管，拧开接线管和拧松未接线端的盖帽；

3. Connect according to the following diagram.
按如下示意图接线。

4.After connecting the wires, tighten the waterproof wiring and move it into the lamp body.
接完电线后拧紧防水接线管并重新塞回灯体内部。

Note:1.embedded cable need to be prepared by customer(The outlet diameter of the protective coil required by the standard wiring pipe is 7-10mm, and the outlet diameter of the thicker protective coil in the accessory package is 5-8mm. Customers can select the corresponding protective coil according to their own pre-buried wires.)
2.Torsion value of waterproof wiring pipe is 5 NM

备注:1. 预埋线需要客户自备(接线管标配的护线圈出线线径要求φ7-10mm, 附件包内加厚护线圈配出线线径φ5-8mm，客户根据自备的预埋线选择相应的护线圈)。
2. 防水接线管扭力值为5NM。

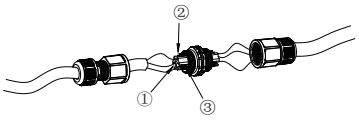

① silver terminal:brown wire L
银色接线柱:棕色线 L
② black terminal:blue wire N
黑色接线柱:蓝色线 N
③ copper termnial:yellow-green grounding wire ⏚
黄铜色接线柱:黄绿线 ⏚

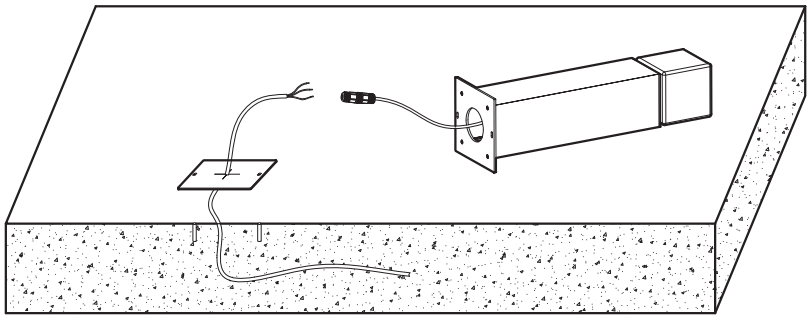

5

Align the fixed hole position of the EVA pad and the lamp to the expansion hole position on the ground and use the ST4.9 x 60 stainless steel screw and nylon gasket in accessory package to fix the whole lamp.
把EVA垫、灯具固定孔位对准地面上的膨胀孔位，使用附件包内的ST4. 9x60不锈钢螺钉和尼龙垫片固定整灯。

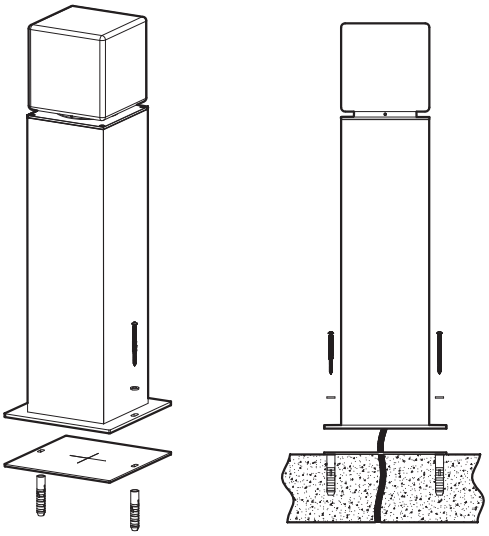

6

After checking the wiring, turn on the power and check if the fixture works properly.
If there is any problem,please contact the seller for timely treatment.
检查安装没问题后，打开电源，检查灯具是否正常，如有任何问题，请与销售方联系，及时处理。

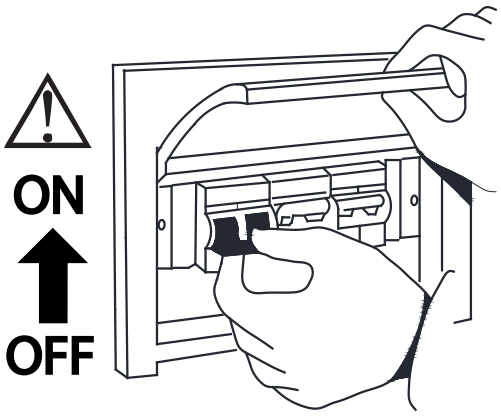

1. Please read this instructions and understand the items properly, and install the luminaires per this instructions.
安装灯具前请务必仔细阅读并理解本说明书，并按照本说明书规定要求安装。
2. Lamps shall be installed by a qualified electrician and wiring shall be in accordance with IEE electrical standards or national standards.
灯具应由有资格的电工安装，接线要符合IEE电气标准或国家标准。
3. When multiple lamps are connected to the power bus, the diameter of the bus wire should be considered and the cable used should be acceptable.The current shall be greater than the sum of the rated current of all lamps.
当多个灯具并接在电源总线时，应考虑总线电线的线径大小，使用的电缆线可承的电流要大于所有灯具额定电流之和。
4. When distributing electricity, pay attention to the specifications of the selected leakage protection switch, and take into account the lamp power supply, cable length and moisture environmental factors that will increase the leakage current.
配电时要注意，所选漏保开关的规格，并且要考虑到灯具电源，电缆长度及潮湿的环境因素都会使漏电电流增大。
5. Power distribution should take into account the surge of currect which air switch can withstand, to leave enough margin, it is recommended to start in stages.
配电时要考虑空开所能承受的浪涌电流，要留有足够的余量，建议分级启动。
6. Switch off main power supply before Installation, maintenance and any operation.
安装、维护和任何操作前，必须切断电源。
7. The lighting source of lamps is not replaceable.When the light source reaches the final service life, the entire lamp shall be replaced.
灯具的光源是不可替换。当光源达到最终使用寿命，需更换整个灯具。
8. The wire connection method is determined by local electrical codes and regulations. Typical method is to use either wire, nuts or screw terminal blocks.
接线方式取决于当地电气法规及规定，一般是使用螺纹旋紧型导线连接器或螺钉接线端子。
9. If the external flexible cable or cord of this luminaire is damaged, it shall be exclusively replaced by the manufacturer or a similar qualified person in order to avoid a hazard.
Y型连接：如果此灯具的外部线缆或软线损坏，该线缆须由制造商，或由有相关资质人员更换，以免发生危险。
10. No hot plug, no live operation.
不可热拔插，不可带电操作。
11. Lamps and lanterns should be examed and cleaned regularly.
灯具要定期检测，定期清洗。

产品中有害物质的名称及含量

部件名称	有害物质					
	铅 (Pb)	汞 (Hg)	镉 (Cd)	六价铬 (Cr(VI))	多溴联苯 (PBB)	多溴二苯醚 (PBDE)
LED灯板/光源	○	○	○	○	○	○
驱动器(板)，铜制及电子零部件	×	○	○	○	○	○
透镜光学部件	○	○	○	○	○	○
外壳及其它零部件	○	○	○	○	○	○

本表格依据SJ/T 11364的规定编制
○:表示该有害物质在该部件所有均质材料中的含量均在GB/T 26572规定的限量要求以下。
×:表示该有害物质至少在该部件所的某一均质材料中的含量超出GB/T 26572规定的限量要求。

Applicable to China Only

Disclaimer
免责条款

1. Please use and install the luminaires correctly according to the protection grade and other precautions marked in the [installation instructions] of the product. The luminaires shall not be immersed in water , The manufacturer shall not be liable for the failure of the luminaires protection caused thereby.
   请根据本产品的【安装说明】中标注的防护等级和其它注意事项，正确使用和安装灯具，此灯具不可处于浸水的环境中，由此导致的灯具防护失效，生产商不承担责任。
2. The luminaire should avoid storage and usage in such a surroundings or an occasion that is with corrosion or hazardous gases like sulfide, halide, phthalate and so on.
   灯具应该避免在有腐蚀或有害气体物存在的环境或场合储存或使用，像硫化物，卤化物，邻苯二甲酸酯等。
3. The PC material cannot be used in such a ambience that is with ethylamine, tetra-dichloroethylene, which is corrosion or hazardous to PC material and so on.
   灯具PC材料不能被使用在含乙胺，四氯乙烯等对PC材料有腐蚀或有害的环境使用。
4. For periodically cleaning maintenance of luminaire which PC material is exposed to outside, Acid solution or alkali solution cannot be used as a cleaning solution to wash outside surface of luminaire.
   为了定期的清洗维护灯具的目的，对于PC材料暴露在灯具外面的，酸性或碱性溶液不能被用来作为冲洗灯具的外表面。
5. Manufacturer is not responsible to improper use, change and modification structure on luminaire. Any damage or unsafety losses caused by these factors under not to be allowed, manufacturer do not take any responsibility for this situation.
   对于不恰当的使用、更换和修改灯具结构，在未经许可的情况下，任何灯具损坏或者由此引起的不安全损失，制造商将不承担任何责任。

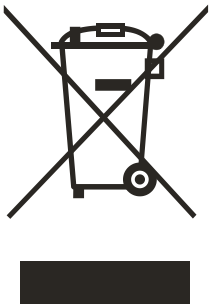

This marking indicates that this product should not be disposed with other household wastes throughout the EU. To prevent possible harm to the environment or human health from uncontrolled waste disposal, recycle it responsibly to promote the sustainable reuse of material resources. To return your used device, please use the return and collection systems or contact the retailer where the product was purchased. They can take this product for environmental safe recycling.

此标记表示本产品不应与欧盟其他家庭垃圾一起处理。为了防止不受控制的废物处理可能对环境或人类健康造成危害，负责任地回收废物，促进物质资源的可持续再利用。若要退回使用过的设备，请使用退货系统或联系购买产品的零售商。他们可以把这个产品进行环保安全回收。