xitanium

Datasheet

CertaFlux DLM Slim 1000lm 4" G2

Plug and Play, easy to use downlight solution

CertaFlux DLM Slim 1000lm 4" G2

CertaFlux DLM Slim G2 downlight module provides plug & play downlight solution with affordable cost but no sacrifice on light quality. The module is integrated with optical and heatsink which help to make the product extremely easy to use. Optimized diffuser gives uniform light. The family is available from 600 lm - 2000lm with different cut out size in 4 CCTs. CertaFlux DLM Slim is fully compatible with Philips recommended driver.

Key features and benefits

Integration with optics and heatsink makes it easy to use
High efficacy, up to 134lm/W @ module level
Full portfolio from 600lm - 2000lm, available in 830/840/850/865 CCT with 4" 6" 8"
Optimized diffuser provides good uniformity

indirect

100%
instant

LED LED

Ordering data

Commercial product name	EOC	12NC	Box quantity
CertaFlux DLM Slim 1000lm 830 4" G2	6922341 945878 00	9290 033 90180	30
CertaFlux DLM Slim 1000lm 840 4" G2	6922341 945892 00	9290 033 90280	30
CertaFlux DLM Slim 1000lm 850 4" G2	6922341 945915 00	9290 033 90380	30
CertaFlux DLM Slim 1000lm 865 4" G2	6922341 945939 00	9290 033 90480	30

Drive currents

Parameter	Nominal*	Life**	Max***	Unit
CertaFlux DLM Slim 1000lm 4" G2	300	See performance window	400	mA

Module temperatures

Parameter	Nominal*	Life**	Max***	Unit
T_c (case temperature at T_c point)	65	See performance window	90	°C

* Nominal value at which typical performance is specified

** Value at which life time is specified

*** Maximum value for safe operation, do not operate above this value

Optical characteristics

CertaFlux DLM Slim 1000lm 830 4" G2
CertaFlux DLM Slim 1000lm 840 4" G2
CertaFlux DLM Slim 1000lm 850 4" G2
CertaFlux DLM Slim 1000lm 865 4" G2

	3000K	4000K	5000K	6500K	Unit
Luminous flux (Φuse)*	1120	1150	1150	1150	lm
Efficacy*	113	116	116	116	lm/W
Max. Color consistency	6	6	6	6	SDCM
Color coordinates (CIEx, CIEy)	0.435, 0.400	0.386, 0.383	0.350, 0.360	0.316, 0.334	
Min. CRI	80	80	80	80	
Photometric code	830/689	840/689	850/689	865/689	
Max. Photobiological safety	RG1 unlimited	RG1 unlimited	RG1 unlimited	RG1 unlimited	
Product contains light sources of energy class:	F	F	F	F	

Measurement precision for flux +/- 5%. Measurement precision for efficacy +/- 6%. Measurement precision for x, y +/- 0.005. Measurement precision for CRI 1.5.

* Flux lower limit spec: -10% of typical. Luminous flux(Φuse) and Efficacy refer to Single Lighting Regulation (SLR).
9290 033 90180 contains light source EPREL model identifier: 929003390180LS. Registration number: 840088.
9290 033 90280 contains light source EPREL model identifier: 929003390280LS. Registration number: 840089.
9290 033 90380 contains light source EPREL model identifier: 929003390380LS. Registration number: 840090.
9290 033 90480 contains light source EPREL model identifier: 929003390480LS. Registration number: 840091.

Tuning table

Operation Point		Current	3000K	4000K	5000K	6500K	Unit
Tc = 25°C	Luminous flux	80% I-nom 240mA	967	998	998	998	lm
		I-nom 300mA	1195	1233	1233	1233	lm
		I-max 400mA	1557	1607	1607	1607	lm
	Efficacy	80% I-nom 240mA	123	127	127	127	lm/W
		I-nom 300mA	121	124	124	124	lm/W
		I-max 400mA	117	120	120	120	lm/W
Tc = 65°C	Luminous flux	80% I-nom 240mA	914	943	943	943	lm
		I-nom 300mA	1120	1150	1150	1150	lm
		I-max 400mA	1451	1498	1498	1498	lm
	Efficacy	80% I-nom 240mA	120	124	124	124	lm/W
		I-nom 300mA	113	116	116	116	lm/W
		I-max 400mA	112	115	115	115	lm/W
Tc = 90°C	Luminous flux	80% I-nom 240mA	877	905	905	905	lm
		I-nom 300mA	1071	1105	1105	1105	lm
		I-max 400mA	1376	1420	1420	1420	lm
	Efficacy	80% I-nom 240mA	117	121	121	121	lm/W
		I-nom 300mA	113	117	117	117	lm/W
		I-max 400mA	108	111	111	111	lm/W

Spectral characteristics

CRI80 3000K

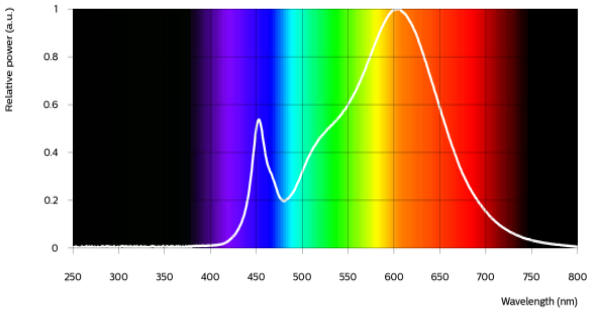

CRI80 4000K

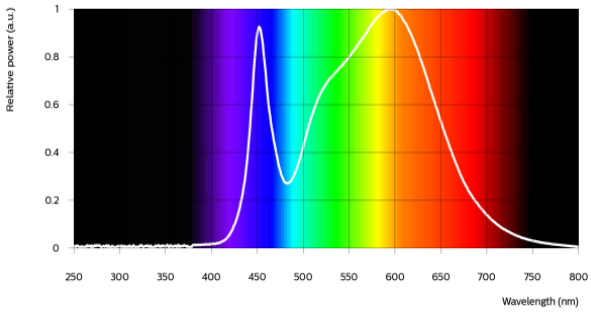

CRI80 5000K

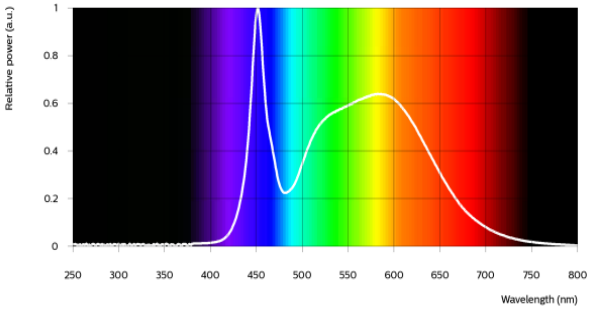

CRI80 6500K

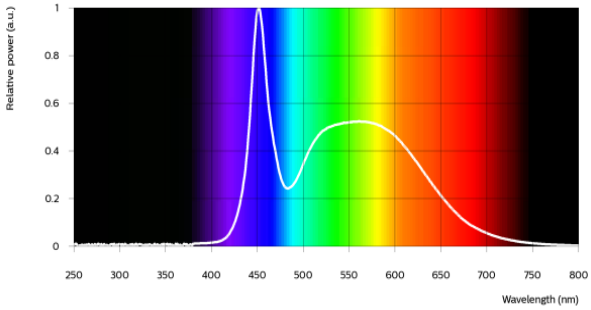

Beam shape

CertaFlux DLM Slim 1000lm 4" G2

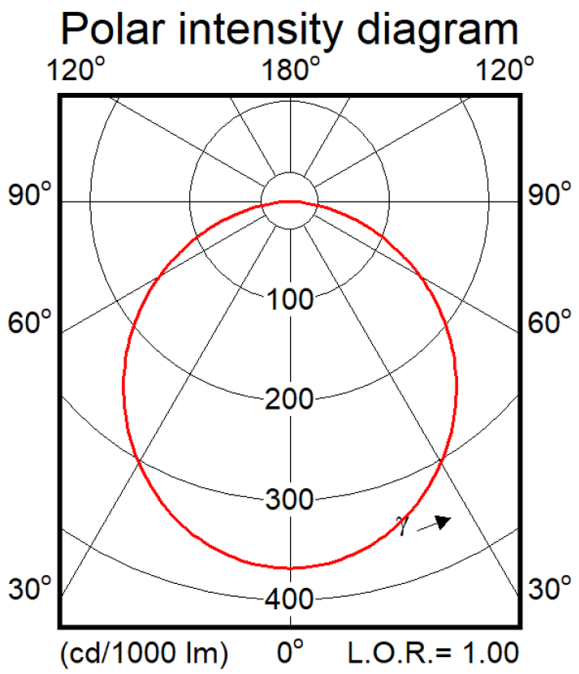

Electrical characteristics

Parameter	Min	Typ	Max	Unit
Forward voltage	31.0	33.0	36.0	V
Power consumption	9.3	9.9	10.8	W = kWh/1000h
Number of modules in series per chain			1	
Number of modules in parallel			1	

Measurement precision for Vf +/- 3%. Measurement precision for power +/- 3.3%

Tuning information

Flux and efficacy versus current (at Tc nominal)

I [mA]	Flux [%]	Efficacy [%]
400	129	96
375	122	97
300	100	100
240	81	103
150	52	107

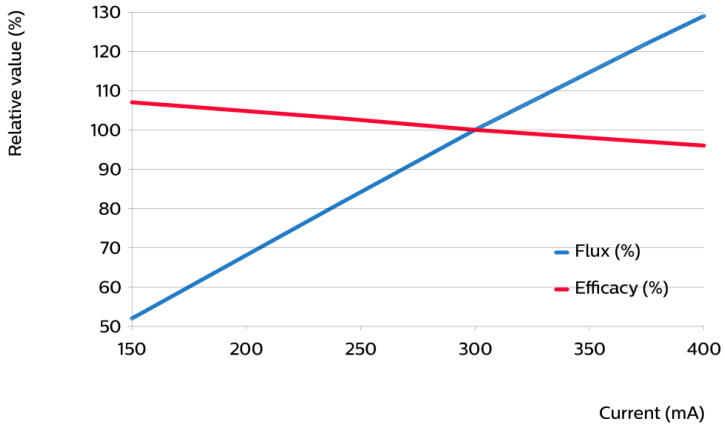

Flux and efficacy versus temperature at Tc (at I nominal)

Tc [°C]	Flux [%]	Efficacy [%]
90	95	97
80	97	98
65	100	100
25	106	103

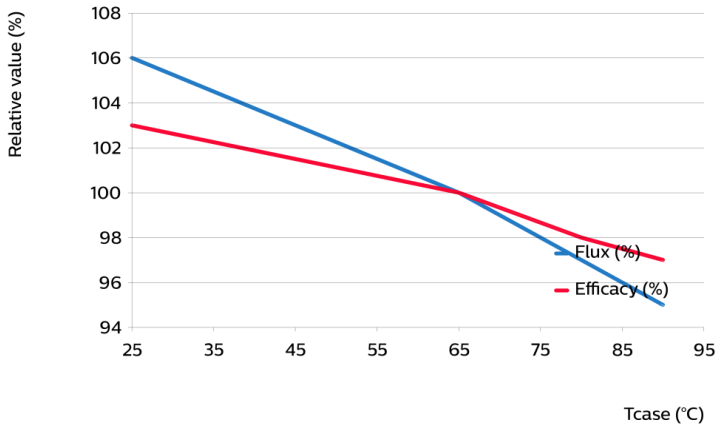

Lumen maintenance

Operation point	Lumen maintenance x 1000 hours	L70 B50	L70 B20	L70 B10	L80 B50	L80 B20	L80 B10	L90 B50	L90 B20	L90 B10
80% I nom 240mA	Tc nom 65°C	>50	>50	>50	>50	>50	>50	34	29	26
	Tc 80°C	>50	>50	>50	>50	>50	48	29	25	22
	Tc max 90°C	>50	>50	>50	>50	48	44	27	22	21
I nom 300mA	Tc nom 65°C	>50	>50	>50	>50	>50	>50	32	27	25
	Tc 80°C	>50	>50	>50	>50	>50	46	28	23	21
	Tc max 90°C	>50	>50	>50	>50	45	42	25	21	19
I max 400mA	Tc nom 65°C	>50	>50	>50	>50	>50	48	29	25	23
	Tc 80°C	>50	>50	>50	>50	46	42	25	21	19
	Tc max 90°C	>50	>50	>50	49	41	38	23	19	18

We use a Philips designed lifetime model, which uses LM80 data as only one of its inputs and assumes a continues operation of the module.
*B20 and B10 values are calculated by means of statistical techniques.

Lifetime

Parameter	Value	Unit
C10 at Tc life	>50000	hours
M70F50 nominal	>50000	hours

Performance Window

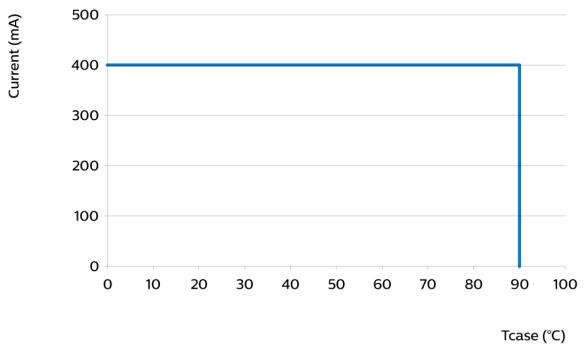

Wiring

Specification item	Value	Unit	Condition
Input wire cross-section	0.75...0.75	mm^2	solid, fused, stranded
	18...18	AWG	solid, fused, stranded
Input wire strip length	8...10	mm	

Stranded, Brown=Positive Blue=Negative

Mechanical characteristics

Parameter	Min	Typ	Max	Unit
Length	118	120	122	mm
Width	118	120	122	mm
Height	35	36	37	mm
Product mass		83		gram

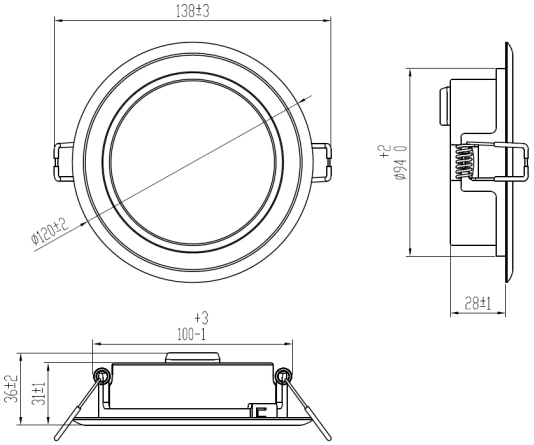

Absolute ratings

Parameter	Min	Max	Unit
Current through the LED module (I-max)		400	mA
Case temperature (Tc-max)		90	°C
ESD (direct contact)	8		kV
Working voltage		60	V_{dc}
Ambient temperature	-25	35	°C
Storage temperature	-40	65	°C

Application information

Certificates and Standards
CB
CE
IEC/TR 62778
IEC/EN 62031
UKCA

Environmental
RoHS/REACH

Application	
IP rating	No IP rating
Overheating protection	No protection
Luminaire class	SELV input only
Dimming	Yes

© 2026 Signify Holding. All rights reserved. The information provided herein is subject to change, without notice. Signify does not give any representation or warranty as to the accuracy or completeness of the information included herein and shall not be liable for any action in reliance thereon. The information presented in this document is not intended as any commercial offer and does not form part of any quotation or contract, unless otherwise agreed by Signify. All trademarks are owned by Signify Holding or their respective owners.

xitanium