PHILIPS

Fortimo

LED

Fortimo SLM C 8xx 1210
L15 1919 G8N HE

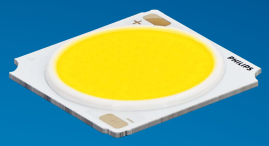

Datasheet

Best combination of quality of light and efficacy with industry standard footprint

Fortimo LED SLM CRI80 G8N HE

Philips continues to develop its tried and trusted high efficiency COB range of products (since 2020) by introducing the third generation Fortimo SLM G8 HE with an expanded offer featuring CRI 80 products. The Fortimo SLM CRI80 G8 HE range boasts an impressive 7% - 12% increase in efficacy and enhanced color consistency of 2 SDCM compared to its predecessor, the Fortimo SLM CRI80 G7. Drawing on our four years of industry and R&D experience with high efficacy COB platforms, we have further optimized the quality of light and enhanced the product's robustness. With the Color Rendering Index extension, Fortimo SLM G8 HE helps unlock the extraordinary potential of light, facilitating innovation and inspiring the next generation of luminaire design for our OEM customers. Check out the online Easy Design-in Tool for your perfect system combination (www.easydesignintool.com).

Key features and benefits

- Most widely used footprint to enable ease of use
- Best quality of light available for all applications
- 7%~12% efficacy improvement vs. current Fortimo SLM CRI80 G7N range
- Excellent color consistency management (2 SDCM)
- System proposition (Module + Driver + Holder)
- Flexibility to optimize luminaire performance (high efficacy or high lm output)
- 50,000 hours lifetime

October 2024



Ordering data

Commercial product name	EOC	12NC	EPREL registration #	Box quantity
Fortimo SLM C 827 1210 L15 1919 G8N HE	8720169 382787 00	9290 039 05380	2093634	20
Fortimo SLM C 830 1210 L15 1919 G8N HE	8720169 382817 00	9290 039 05480	2093655	20
Fortimo SLM C 835 1210 L15 1919 G8N HE	8720169 382848 00	9290 039 05580	2093657	20
Fortimo SLM C 840 1210 L15 1919 G8N HE	8720169 382879 00	9290 039 05680	2093792	20
Fortimo SLM C 850 1210 L15 1919 G8N HE	8720169 382909 00	9290 039 05780	2093649	20
Fortimo SLM C 830 PW 1210 L15 1919 G8N HE	8720169 382930 00	9290 039 05880	2093635	20

Not all products are globally available by default.
Please contact your local sales representative for local availability and activation conditions.

Drive currents

Parameter	Nominal*	Life**	Max***	Unit
Fortimo SLM C 8xx 1210 L15 1919 G8N HE	900	1800	1800	mA

Module temperatures

Parameter	Nominal*	Life**	Max***	Unit
T_c (case temperature at T_c point)	65	95	95	°C

* Nominal value at which typical performance is specified

** Value at which life time is specified

*** Maximum value for safe operation, do not operate above this value

Optical characteristics - table per color (CCT)

Fortimo SLM C 827 1210 L15 1919 G8N HE

Parameter	Min	Typ	Max	Unit
Luminous flux	4854	5110	5621	lm
Efficacy		165		lm/W
Correlated color temperature (CCT)		2700		K
Color coordinates (CIEx, CIEy)		(0.458, 0.410)		-
Color consistency			2	SDCM
CRI	80			
R9	>0			
Photometric code		827/259		
Photobiological safety		RG1 unlimited		

Measurement precision ± 5% for the flux data and ± 6% for the efficacy data. Measurement precision for color coordinates ± 0.005. Measurement precision for CRI ± 1.5.

Operation point	827	lm	lm/W
80% I-nom 720mA	Tc 25 °C	4384	178
	Tc-nom 65 °C	4156	171
	Tc-max 95 °C	3951	164
I-nom 900mA	Tc 25 °C	5392	172
	Tc-nom 65 °C	5110	165
	Tc-max 95 °C	4856	158
I-max 1800mA	Tc 25 °C	10055	147
	Tc-nom 65 °C	9504	140
	Tc-max 95 °C	9007	134

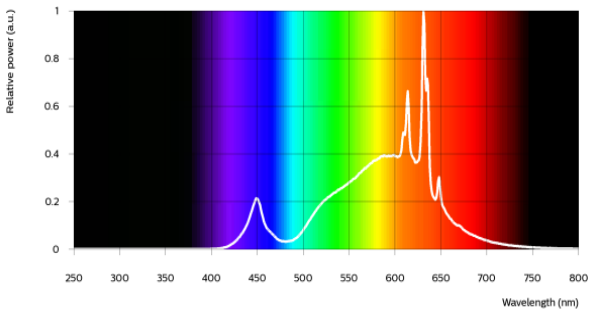

Fortimo SLM C 830 1210 L15 1919 G8N HE

Parameter	Min	Typ	Max	Unit
Luminous flux	4978	5240	5764	lm
Efficacy		169		lm/W
Correlated color temperature (CCT)		3000		K
Color coordinates (CIEx, CIEy)		(0.434, 0.403)		-
Color consistency			2	SDCM
CRI	80			
R9	>0			
Photometric code		830/259		
Photobiological safety		RG1 unlimited		

Measurement precision ± 5% for the flux data and ± 6% for the efficacy data. Measurement precision for color coordinates ± 0.005. Measurement precision for CRI ± 1.5.

Operation point	830	lm	lm/W
80% I-nom 720mA	Tc 25 °C	4495	183
	Tc-nom 65 °C	4262	175
	Tc-max 95 °C	4052	168
I-nom 900mA	Tc 25 °C	5529	176
	Tc-nom 65 °C	5240	169
	Tc-max 95 °C	4980	162
I-max 1800mA	Tc 25 °C	10311	151
	Tc-nom 65 °C	9746	144
	Tc-max 95 °C	9237	137

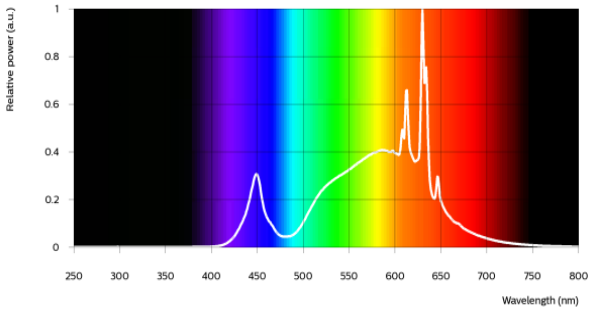

Fortimo SLM C 835 1210 L15 1919 G8N HE

Parameter	Min	Typ	Max	Unit
Luminous flux	5097	5365	5902	lm
Efficacy		173		lm/W
Correlated color temperature (CCT)		3500		K
Color coordinates (CIEx, CIEy)		(0.408, 0.393)		-
Color consistency			2	SDCM
CRI	80			
R9	>0			
Photometric code		835/259		
Photobiological safety		RG1 unlimited		



Measurement precision ± 5% for the flux data and ± 6% for the efficacy data. Measurement precision for color coordinates ± 0.005. Measurement precision for CRI ± 1.5.

Operation point	835	lm	lm/W
80% I-nom 720mA	Tc 25 °C	4602	187
	Tc-nom 65 °C	4363	180
	Tc-max 95 °C	4148	172
I-nom 900mA	Tc 25 °C	5661	180
	Tc-nom 65 °C	5365	173
	Tc-max 95 °C	5099	166
I-max 1800mA	Tc 25 °C	10559	154
	Tc-nom 65 °C	9981	147
	Tc-max 95 °C	9460	141

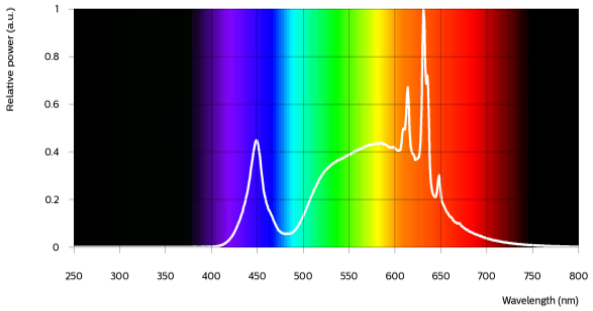

Fortimo SLM C 840 1210 L15 1919 G8N HE

Parameter	Min	Typ	Max	Unit
Luminous flux	5125	5395	5934	lm
Efficacy		174		lm/W
Correlated color temperature (CCT)		4000		K
Color coordinates (CIEx, CIEy)		(0.382, 0.380)		-
Color consistency			2	SDCM
CRI	80			
R9	>0			
Photometric code		840/259		
Photobiological safety		RG1 unlimited		



Measurement precision ± 5% for the flux data and ± 6% for the efficacy data. Measurement precision for color coordinates ± 0.005. Measurement precision for CRI ± 1.5.

Operation point	840	lm	lm/W
80% I-nom 720mA	Tc 25 °C	4627	188
	Tc-nom 65 °C	4387	181
	Tc-max 95 °C	4171	173
I-nom 900mA	Tc 25 °C	5692	181
	Tc-nom 65 °C	5395	174
	Tc-max 95 °C	5127	167
I-max 1800mA	Tc 25 °C	10618	155
	Tc-nom 65 °C	10038	148
	Tc-max 95 °C	9514	142

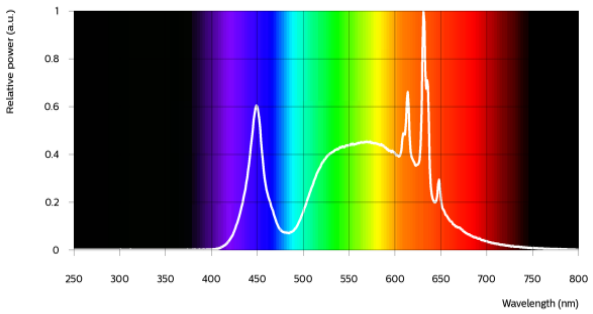

Fortimo SLM C 850 1210 L15 1919 G8N HE

Parameter	Min	Typ	Max	Unit
Luminous flux	5125	5395	5934	lm
Efficacy		174		lm/W
Correlated color temperature (CCT)		5000		K
Color coordinates (CIEx, CIEy)		(0.345, 0.355)		-
Color consistency			2	SDCM
CRI	80			
R9	>0			
Photometric code		850/259		
Photobiological safety		RG1 unlimited		



Measurement precision ± 5% for the flux data and ± 6% for the efficacy data. Measurement precision for color coordinates ± 0.005. Measurement precision for CRI ± 1.5.

Operation point	850	lm	lm/W
80% I-nom 720mA	Tc 25 °C	4627	188
	Tc-nom 65 °C	4387	181
	Tc-max 95 °C	4171	173
I-nom 900mA	Tc 25 °C	5692	181
	Tc-nom 65 °C	5395	174
	Tc-max 95 °C	5127	167
I-max 1800mA	Tc 25 °C	10618	155
	Tc-nom 65 °C	10038	148
	Tc-max 95 °C	9514	142

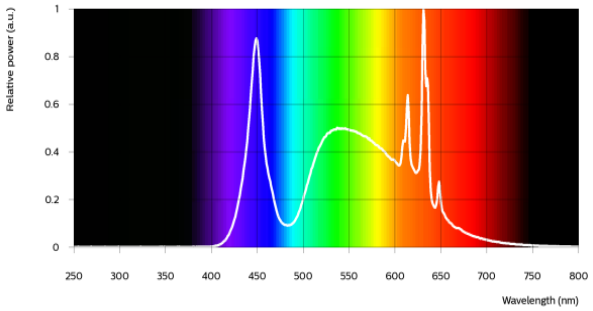

Fortimo SLM C 830 PW 1210 L15 1919 G8N HE

Parameter	Min	Typ	Max	Unit
Luminous flux	4907	5165	5682	lm
Efficacy		167		lm/W
Correlated color temperature (CCT)		3000		K
Color coordinates (CIEx, CIEy)		(0.422, 0.386)		-
Color consistency			2	SDCM
CRI	80			
R9	>0			
Photometric code		830/259		
Photobiological safety		RG1 unlimited		



Measurement precision ± 5% for the flux data and ± 6% for the efficacy data. Measurement precision for color coordinates ± 0.005. Measurement precision for CRI ± 1.5.

Operation point	830	lm	lm/W
80% I-nom 720mA	Tc 25 °C	4430	180
	Tc-nom 65 °C	4201	173
	Tc-max 95 °C	3994	166
I-nom 900mA	Tc 25 °C	5450	174
	Tc-nom 65 °C	5165	167
	Tc-max 95 °C	4909	160
I-max 1800mA	Tc 25 °C	10164	148
	Tc-nom 65 °C	9608	142
	Tc-max 95 °C	9106	136

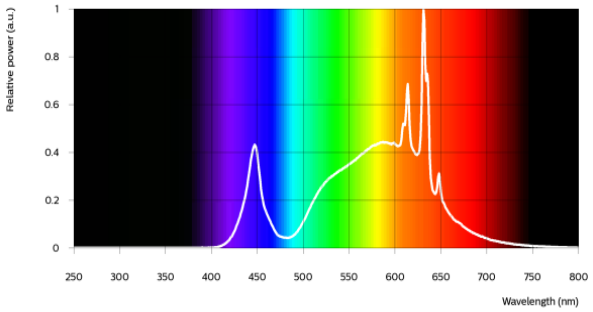

Beam shape

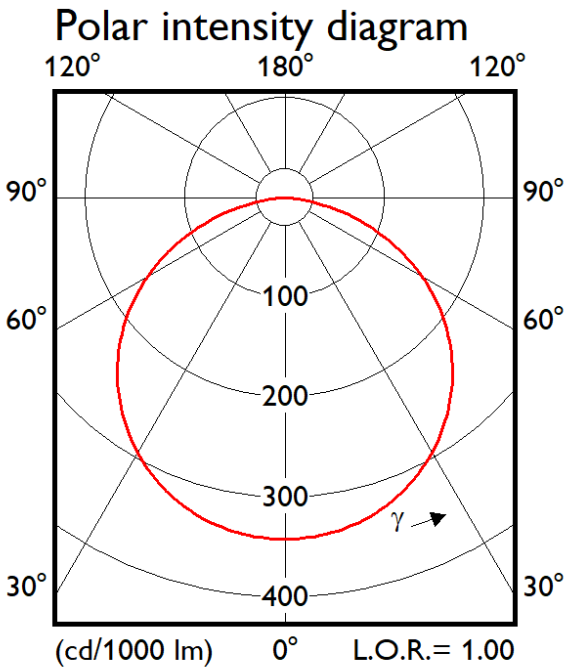
Polar intensity diagram
120°
180°
120°
90°
90°
60°
60°
100
200
300
γ
30°
30°
400
(cd/1000 lm)
0°
L.O.R.= 1.00

Electrical characteristics

Parameter	Min	Typ	Max	Unit
Forward voltage	32.5	34.5	37.0	V
Power consumption	29.3	31.1	33.3	W = kWh/1000h
Number of modules in series per chain			1	
Number of modules per chain			1	
Number of modules in parallel			1	

Measurement precision for Vf +/- 3%. Measurement precision for power +/- 3.3%

Tuning information

Flux and efficacy versus current (at Tc nominal)

I [mA]	Flux [%]	Efficacy [%]
1800	186	85
1350	144	92
900	100	100
720	81	104
450	52	110

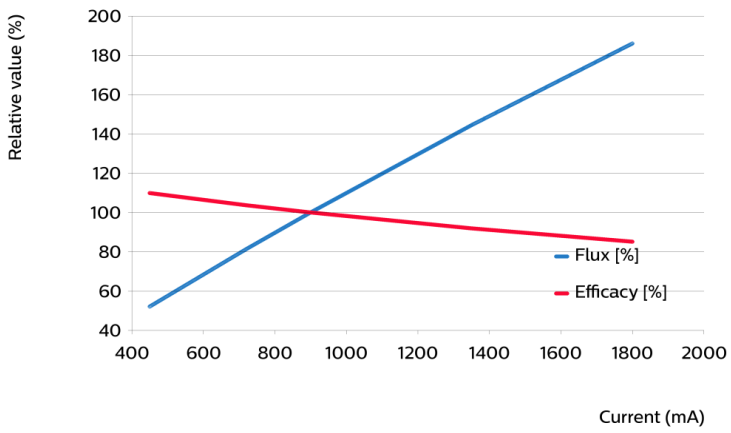

Flux and efficacy versus temperature at Tc (at I nominal)

Tc [°C]	Flux [%]	Efficacy [%]
95	95	96
65	100	100
25	106	104
0	108	106

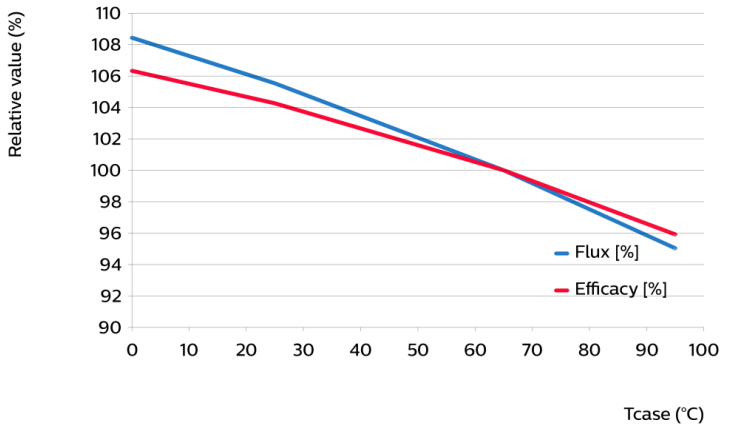

Lumen maintenance

Operation point	Lumen maintenance	L70			L80			L90		
	x 1000 hours	B50	B20	B10	B50	B20	B10	B50	B20	B10
80% I-nom 720mA	Tc 50°C	>66	>66	>66	>66	>66	>66	>66	>66	>66
	Tc 65°C	>66	>66	>66	>66	>66	>66	>66	>66	>66
	Tc 95°C	>66	>66	>66	>66	>66	>66	>66	>66	>66
I-nom 900mA	Tc 50°C	>66	>66	>66	>66	>66	>66	>66	>66	>66
	Tc 65°C	>66	>66	>66	>66	>66	>66	>66	>66	>66
	Tc 95°C	>66	>66	>66	>66	>66	>66	>66	>66	62
I-max 1800mA	Tc 50°C	>66	>66	>66	>66	>66	>66	50	42	39
	Tc 65°C	>66	>66	>66	>66	>66	62	38	32	29
	Tc 95°C	>66	>66	60	49	41	38	23	19	17

Lifetime

Parameter	Value	Unit
M70F50 nominal	>66000	hours

Performance Window

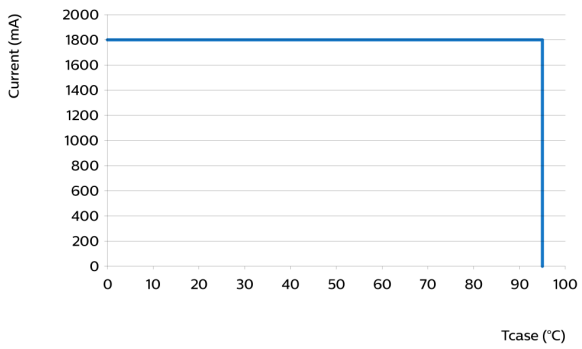

Mechanical characteristics

Parameter	Min	Typ	Max	Unit
Length	18.75	19	19.25	mm
Width	18.75	19	19.25	mm
Height	0.8	0.9	1	mm
Height	1.3	1.6	1.9	mm
Product mass		1.04		gram

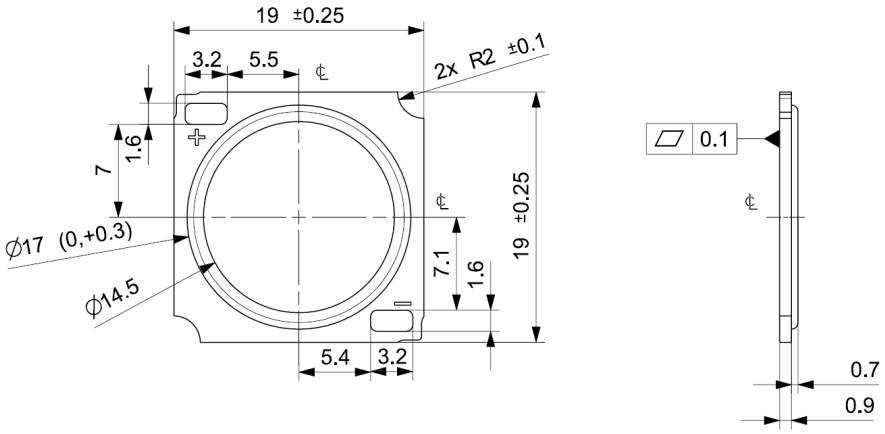

Absolute ratings

Parameter	Min	Max	Unit
Current through the LED module (I-max)		1800	mA
Case temperature (Tc-max)		95	°C
ESD (direct contact)	8		kV
Working voltage		60	V_{dc}
Ambient temperature	-20	40	°C
Storage temperature	-40	80	°C

At illumination levels exceeding 1342 lux risk group classification may be RG2.

Application information

Certificates and Standards
CB
CE
ENEC
ENEC+
EPRS 001
IEC 62031
UKCA
UL
UL 8750

Environmental
RoHS/REACH

Application	
Dimming	Yes



© 2024 Signify Holding, IBRS 10461, 5600VB, NL. All rights reserved. The information provided herein is subject to change, without notice. Signify does not give any representation or warranty as to the accuracy or completeness of the information included herein and shall not be liable for any action in reliance thereon. The information presented in this document is not intended as any commercial offer and does not form part of any quotation or contract, unless otherwise agreed by Signify.

Philips and the Philips Shield Emblem are registered trademarks of Koninklijke Philips N.V. All other trademarks are owned by Signify Holding or their respective owners.
UK importer address: Signify Commercial UK Limited, 3 Guildford Business Park, GU2 8XG

11/10/2024

www.philips.com/oem