1 x PLL 24W 3000K 9290035928

1 x 3200 lm

Polar intensity diagram

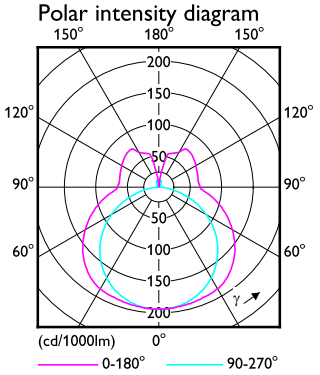

Quantity estimation diagram

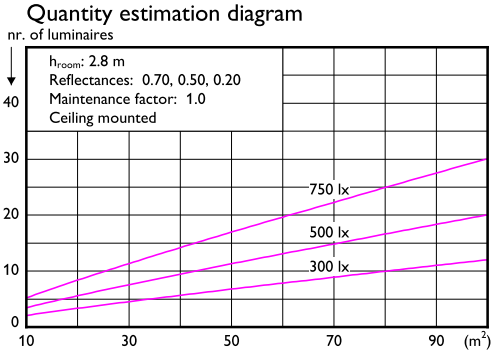

UGR diagram

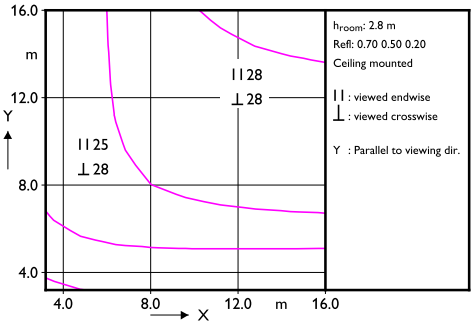

Light output ratio	0.99
Service upward	0.27
Service downward	0.72
CIE flux code	38 68 89 73 99
UGRcen (4Hx8H, 0.25H)	28

Utilisation factor table

Room Index k	Reflectances (%) for ceiling, walls and working plane (CIE)										
	0.80	0.80	0.70	0.70	0.70	0.70	0.50	0.50	0.30	0.30	0.00
	0.50	0.50	0.50	0.50	0.50	0.30	0.30	0.10	0.30	0.10	0.00
	0.30	0.10	0.30	0.20	0.10	0.10	0.10	0.10	0.10	0.10	0.00
0.60	0.40	0.38	0.38	0.38	0.37	0.30	0.27	0.23	0.25	0.21	0.18
0.80	0.50	0.47	0.48	0.46	0.45	0.38	0.35	0.30	0.32	0.28	0.23
1.00	0.58	0.54	0.55	0.53	0.52	0.44	0.41	0.36	0.37	0.33	0.28
1.25	0.66	0.61	0.63	0.60	0.58	0.51	0.47	0.42	0.43	0.39	0.33
1.50	0.72	0.66	0.68	0.65	0.63	0.56	0.52	0.47	0.47	0.43	0.37
2.00	0.82	0.73	0.77	0.73	0.70	0.64	0.59	0.55	0.54	0.50	0.43
2.50	0.88	0.78	0.83	0.79	0.75	0.69	0.64	0.60	0.58	0.55	0.48
3.00	0.93	0.81	0.87	0.82	0.78	0.73	0.67	0.64	0.62	0.59	0.51
4.00	0.99	0.86	0.93	0.87	0.82	0.78	0.72	0.69	0.66	0.64	0.55
5.00	1.03	0.89	0.97	0.90	0.85	0.81	0.75	0.72	0.69	0.67	0.58

Ceiling mounted

Luminance Table

Plane / Cone	0.0	15.0	30.0	45.0	60.0	75.0	90.0
45.0	25473	25143	25414	25244	25595	27113	29336
50.0	24750	24347	24592	24483	24957	26357	28546
55.0	23896	23481	23762	23683	24252	25500	27615
60.0	23129	22635	22887	22705	23206	24296	26331
65.0	22330	21714	21889	21545	21906	22786	24672
70.0	21506	20775	20885	20250	20295	20835	22356
75.0	20763	19889	19911	18902	18507	18535	19329
80.0	19948	18934	18877	17471	16567	15872	15274
85.0	19352	18117	17919	16090	14589	12891	9193
90.0	20281	18783	18531	16330	14358	12357	3246

(cd/m²)

s22100006g

2022-10-28