Mazda Wall-mounted

WL007C

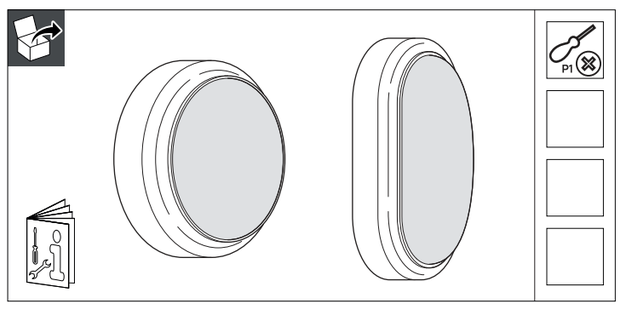

CE | indoor | outdoor * | 220V 240V | 50Hz 60Hz | IK06 | Max. 40 °C Min. -20 °C

	CCT (K)	P (W)	IP..	Energy efficiency class	kg
MAZDA WL007C G2 13S/840 PSU OVL WH	4000	15	65	E	0.29
MAZDA WL007C G2 13S/840 PSU MDU RND WH	4000	15	65	E	0.28

Oval

Dimensions in mm

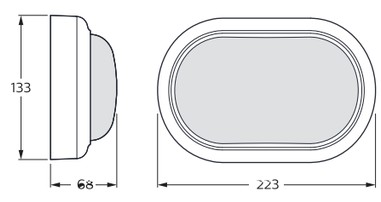

Round-Sensor

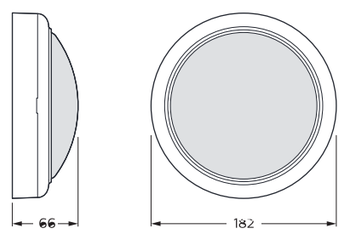

1

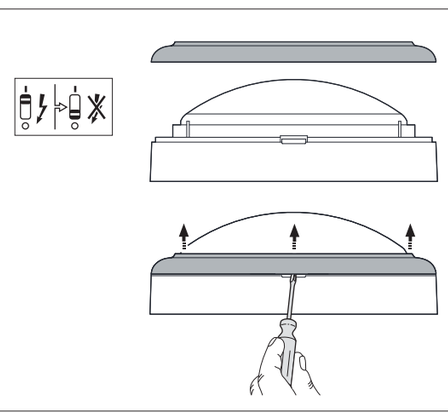

It is not allowed to install the outgoing line without selecting the knockout hole position

© 2018

Printed in The Netherlands
Data subject to change without notice

2

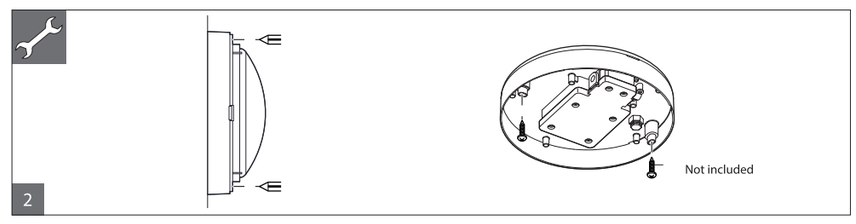

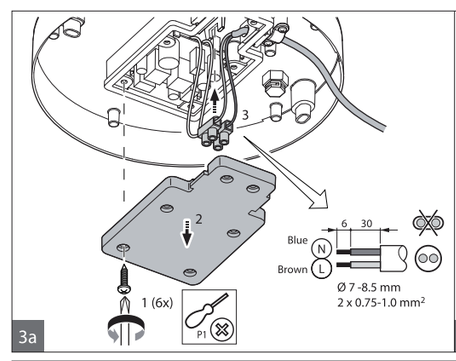

3a

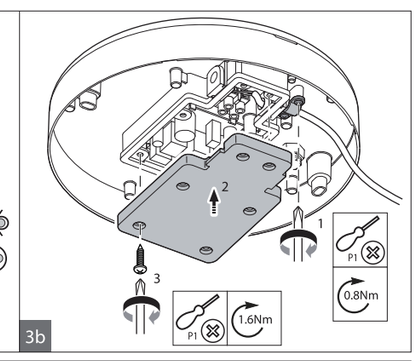

3b

4

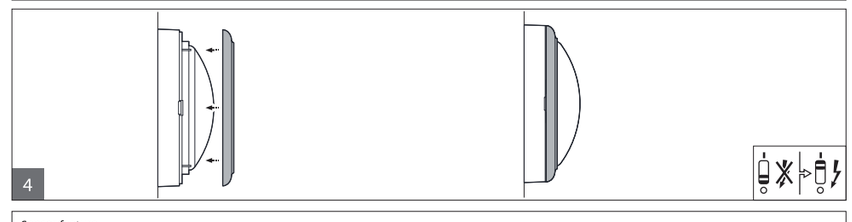

Sensor feature

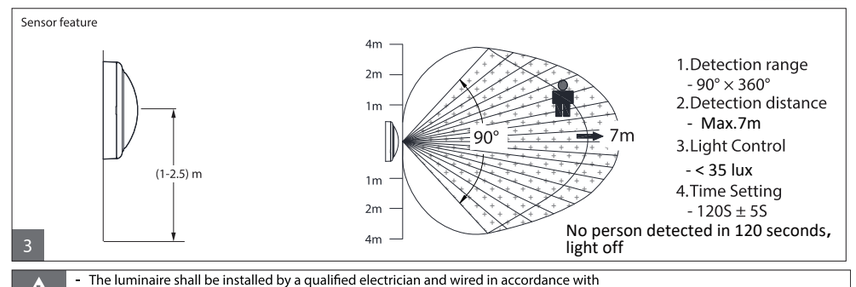

3

- The luminaire shall be installed by a qualified electrician and wired in accordance with the latest IEE electrical regulations or the national requirements.
- The light source of this luminaire is not replaceable; when the light source reaches its end of life the whole luminaire shall be replaced.
- **Avoid placing microwave sensor near large metal surfaces,ventilation ducts,pipes and/or other moving objects.**
- **For outdoor operation at a building, vertical wall- mounted only: all its cables shall run indoor, with a maximum distance of 10 meter.**
- **For outdoor operation the luminairecan only be used in the aisle or semi-shaded environment or the environment blocked by glass, and it is not recommended to use it directly exposed to direct sunlight!**

ATTENTION
OBSERVE PRECAUTIONS FOR HANDLING
ELECTROSTATIC SENSITIVE DEVICES