PHILIPS

Fortimo

LED

Fortimo SLM PC 1203 L09 1619 G7

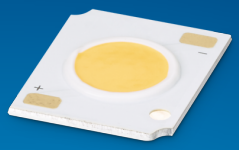

Datasheet

Experience bright and vivid colors

Fortimo LED SLM PC 1203 L09 1619 G7

Fortimo LED SLM Gen7 continues to focus on the combination of Quality of Light and performance. By offering the CoB separate from the holder, even more flexibility in possible system combinations and specifications is achieved. This results in an extensive portfolio of lumen ranges, CCTs and spectra. Please also check the online Easy Design-in Tool for your perfect system combination (www.easydesignintool.com)

Key features and benefits

Best quality of light available for all applications
Instant full light
Extensive range of CCT's
Flexibility to select a different lumen output between 800 and 10000 lm
State of the art Chip-on-Board (CoB) technology, enabling highest system efficacy
System proposition (CoB + Holder + driver)
Flexibility to optimize luminaire performance (lm/W or high lm output)
Xitanium window drivers with SimpleSet for maximum flexibility
Mini drivers for smallest possible luminaire designs
Five years system warranty with over 50,000 hours lifetime
Four dedicated product lines:
·SLM Premium White
·SLM Premium Color
·SLM CrispWhite
·SLM Food

September 2021



Ordering data

Commercial product name	EOC	12NC	Box quantity
Fortimo SLM C 930 PC 1203 L09 1619 G7	8718699 615796 00	9290 016 47706	20

Drive currents

Parameter	Nominal*	Life**	Max***	Unit
Fortimo SLM PC 1203 L09 1619 G7	300	see performance window	510	mA

Module temperatures

Parameter	Nominal*	Life**	Max***	Unit
T_c (case temperature at T_c point)	85	see performance window	95	°C

* Nominal value at which typical performance is specified

** Value at which life time is specified

*** Maximum value for safe operation, do not operate above this value

Optical characteristics - table per color (CCT)

Fortimo SLM C 930 PC 1203 L09 1619 G7

Parameter	Min	Typ	Max	Unit
Luminous flux	1071	1190	1309	lm
Module efficacy	104	115		lm/W
Correlated color temperature (CCT)		3000		K
Color coordinates (CIEx, CIEy)		(0.422, 0.386)		-
Color consistency			3	SDCM
CRI	90	92		
R9	50			
Photometric code		930/359		
Photobiological safety			RG1 unlimited	



Operation point	930	lm	lm/W
80% I-nom 240mA	Tc 25 °C	1056	127
	Tc-nom 85 °C	976	120
	Tc-max 95 °C	960	119
I-nom 300mA	Tc 25 °C	1294	123
	Tc-nom 85 °C	1190	115
	Tc-max 95 °C	1170	114
I-max 510mA	Tc 25 °C	2049	109
	Tc-nom 85 °C	1863	101
	Tc-max 95 °C	1827	99

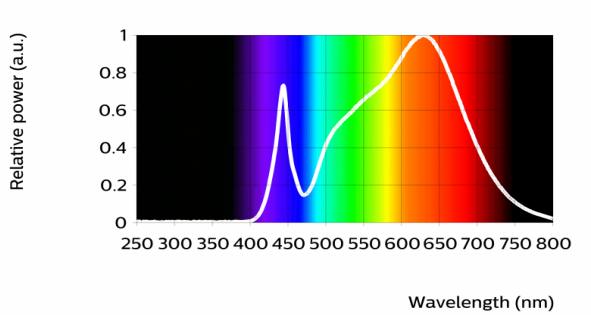

R1	R2	R3	R4	R5	R6	R7	R8	R9	R10	R11	R12	R13	R14
97	96	94	91	95	96	91	88	75	90	92	88	96	96

Beam shape

Bare CoB

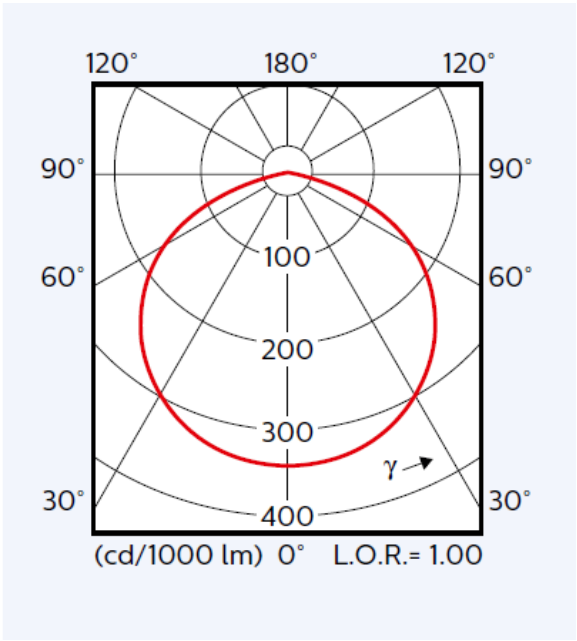

CoB with a standard/ down-light/ Zhaga poke-in holder

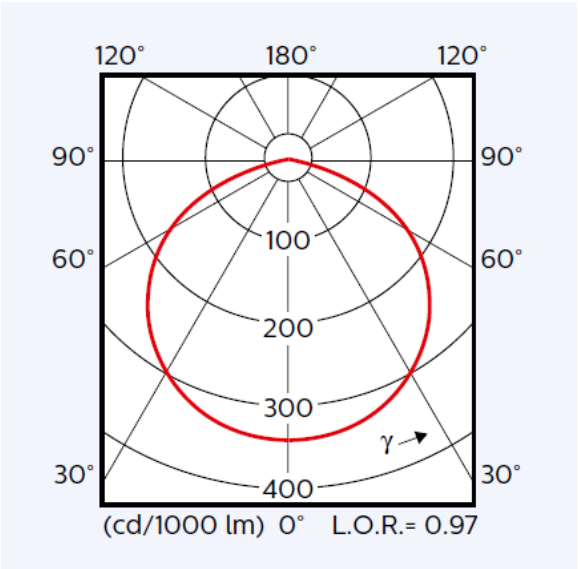

CoB with a poke-in holder

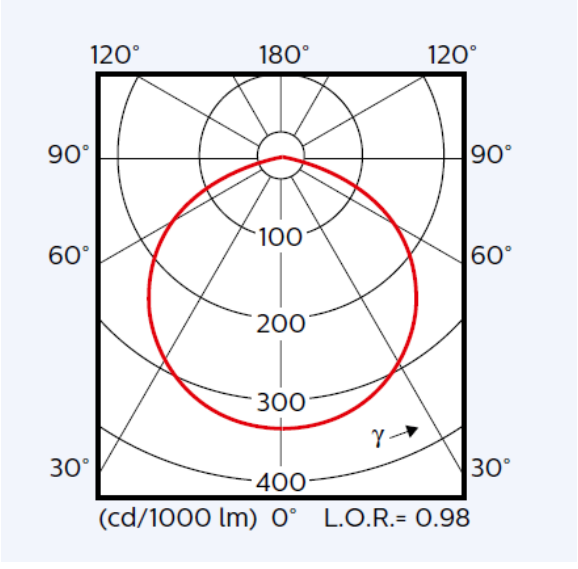

Electrical characteristics

Parameter	Min	Typ	Max	Unit
Forward voltage	32.4	34.4	37.4	V
Power consumption	9.7	10.3	11.2	W = kWh/1000h
Number of modules in series per chain			1	
Number of modules per chain			1	
Number of modules in parallel			1	

Tuning information

Flux and efficacy versus current (at Tc nominal)

I [mA]	Flux [%]	Efficacy [%]
510	157	87
405	129	93
300	100	100
240	82	104
150	53	111

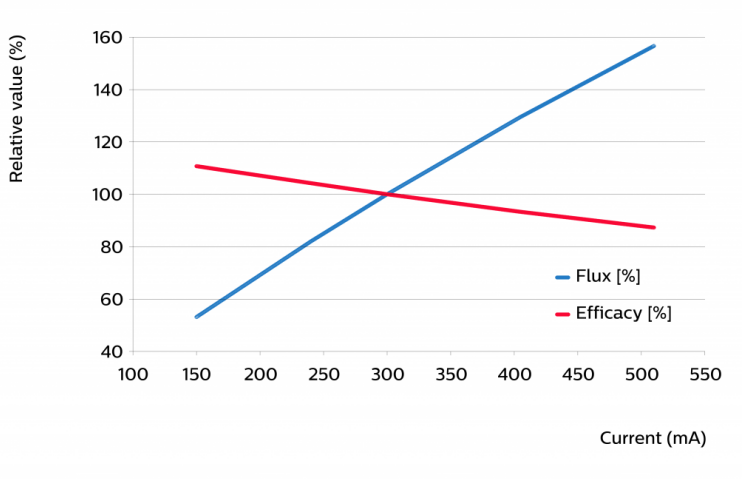

Flux and efficacy versus temperature at Tc (at I nominal)

Tc [°C]	Flux [%]	Efficacy [%]
95	98	99
85	100	100
25	109	107
0	112	109

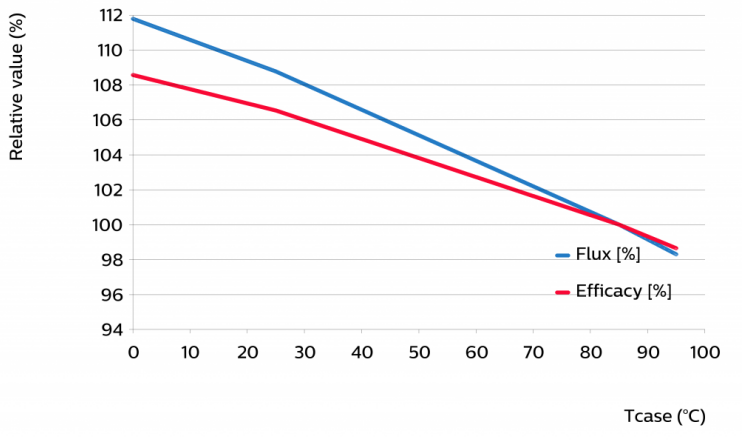

Lumen maintenance

Operation point	Lumen maintenance x 1000 hours	L70			L80			L90		
		B50	B20	B10	B50	B20	B10	B50	B20	B10
80% I nom 240 mA	Tc 65°C	>50	>50	>50	>50	>50	>50	>50	>50	42
	Tc nom 85°C	>50	>50	>50	>50	48	39	35	23	18
	Tc max 95°C	>50	>50	42	>50	33	27	24	16	13
I nom 300 mA	Tc 65°C	>50	>50	>50	>50	>50	>50	>50	47	38
	Tc nom 85°C	>50	>50	>50	>50	44	35	32	21	17
	Tc max 95°C	>50	49	39	46	30	24	22	14	12
I max 510 mA	Tc 65°C	>50	>50	>50	>50	>50	>50	50	33	26
	Tc nom 85°C	>50	>50	41	48	32	25	23	15	12
	Tc max 95°C	>50	35	28	34	22	18	16	10	8

Lifetime

Parameter	Value	Unit
C10 at Tc life	50000	hours
M70F50 nominal	>50000	hours
M70F50 life	>50000	hours

Switching cycles in accordance to EU 1194/2012: >15000
At I life L70B50>50000 hours.
Charts presenting module's lumen maintenance data are available via your sales representative.
Please refer to the performance window to ensure that your operati

Performance Window

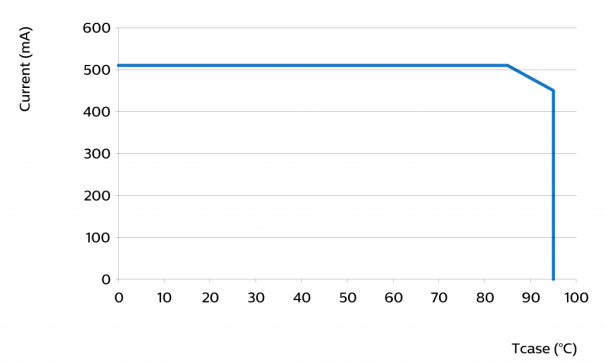

Mechanical characteristics

Parameter	Min	Typ	Max	Unit
Length	18.8	19	19.2	mm
Width	15.8	16	16.2	mm
Height PCB	0.9	1	1.1	mm
Height including dam	1.2	1.5	1.8	mm
Product mass		0.78		gram

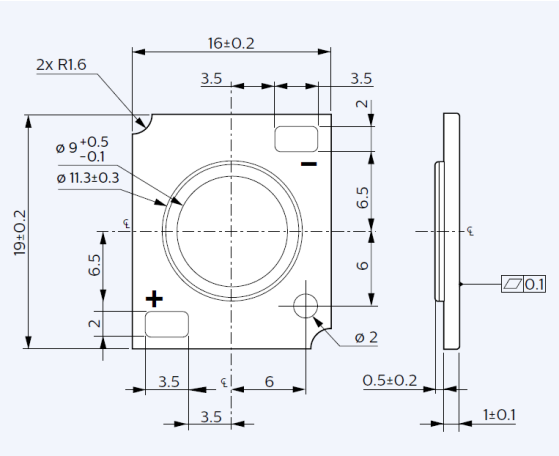

Absolute ratings

Parameter	Min	Max	Unit
Current through the LED module (I-max)		510	mA
Case temperature (Tc-max)		95	°C
Power at rated Vf-max and I-max		20	W
ESD (direct contact)	8		kV
Working voltage		180	V_{dc}
Ambient temperature		40	°C
Storage temperature	-40	80	°C

Application information

Certificates and Standards
IEC 62031:2008/A1:2012/A2:2014
EN 62031:2008/A1:2013/A2:2015
Relevant clauses of IEC 62471:2006 (Incl. IEC/TR 62471-2: 2009 and IEC/TR 62778: 2014)
Relevant clauses of IEC 60838-1:2004/A1:2008/A2:2011 with IEC 60838-2-2:2006 /A1:2012
Relevant clauses of EN 62471:2008 (With IEC/TR 62471-2: 2009 and IEC/TR 62778: 2014)
Relevant clauses of EN 60838-1:2004/A1:2008/A2:2011 with EN 60838-2-2:2006/A1:2012
UL 8750
ENEC+
CE

Environmental
RoHS/REACH

Application	
IP rating	No IP-rating
Overheating protection	No
Luminaire class	IEC Class I and Class II
Dimming	Yes



© 2021 Signify Holding, IBRS 10461, 5600VB, NL. All rights reserved. The information provided herein is subject to change, without notice. Signify does not give any representation or warranty as to the accuracy or completeness of the information included herein and shall not be liable for any action in reliance thereon. The information presented in this document is not intended as any commercial offer and does not form part of any quotation or contract, unless otherwise agreed by Signify.

Philips and the Philips Shield Emblem are registered trademarks of Koninklijke Philips N.V. All other trademarks are owned by Signify Holding or their respective owners.
UK importer address: 3 Guildford Business Park, GU2 8XG

09/09/2021

www.philips.com/oem