

Experience bright and vivid colors

Fortimo LED SLM PW 1211 L19 2828 G7

Fortimo LED SLM Gen7 continues to focus on the combination of Quality of Light and performance. By offering the CoB separate from the holder, even more flexibility in possible system combinations and specifications is achieved. This results in an extensive portfolio of lumen ranges, CCTs and spectra. Please also check the online Easy Design-in Tool for your perfect system combination (www.easydesignintool.com)

Key features and benefits

Best quality of light available for all applications
Extensive range of CCTs
Small LES for narrow beam angles and small reflector designs
Flexibility to select a different lumen output between 800 and 10000 lm
State of the art Chip-on-Board (CoB) technology, enabling highest system efficacy
System proposition (CoB + Holder + driver)
Flexibility to optimize luminaire performance (lm/W or high lm output)
Xitanium window drivers with SimpleSet for maximum flexibility
Mini drivers for smallest possible luminaire designs
Five years system warranty with over 50,000 hours lifetime
Instant full light

Ordering data

Commercial product name	12NC	Box quantity
Fortimo SLM C 830 PW 1211 L19 2828 G7	9290 015 92606	10
Fortimo SLM C 930 PW 1211 L19 2828 G7	9290 015 92706	10
Fortimo SLM C 935 PW 1211 L19 2828 G7	9290 015 92806	10
Fortimo SLM C 940 PW 1211 L19 2828 G7	9290 015 92906	10

Not all products are globally available by default.
Please contact your local Philips Lighting representative for local availability and activation.

Drive currents

Parameter	Nominal*	Life**	Max***	Unit
Fortimo SLM PW 1211 L19 2828 G7	1200	see performance window	2000	mA

Module temperatures

Parameter	Nominal*	Life**	Max***	Unit
T_c (case temperature at T_c point)	85	see performance window	95	°C

* Nominal value at which typical performance is specified

** Value at which life time is specified

*** Maximum value for safe operation, do not operate above this value

Optical characteristics - table per color (CCT)

Fortimo SLM C 830 PW 1211 L19 2828 G7

Parameter	Min	Typ	Max	Unit
Luminous flux	5571	6190	6809	lm
Module efficacy	134	149		lm/W
Correlated color temperature (CCT)		3000		K
Color coordinates (CIEx, CIEy)		(0.422, 0.386)		-
Color consistency			3	SDCM
CRI	80	82		
Photometric code		830/359		

Measurement precision for flux +/- 5%.Measurement precision for efficacy +/- 6%. Measurement precision for x, y +/- 0.005. Measurement precision for CRI 1.5

Operation point	830	lm	lm/W
80% I-nom 960mA	Tc 25 °C	5579	167
	Tc-nom 85 °C	5102	157
	Tc-max 95 °C	5009	154
I-nom 1200mA	Tc 25 °C	6811	160
	Tc-nom 85 °C	6190	149
	Tc-max 95 °C	6070	147
I-max 2000mA	Tc 25 °C	10492	138
	Tc-nom 85 °C	9403	127
	Tc-max 95 °C	9191	124

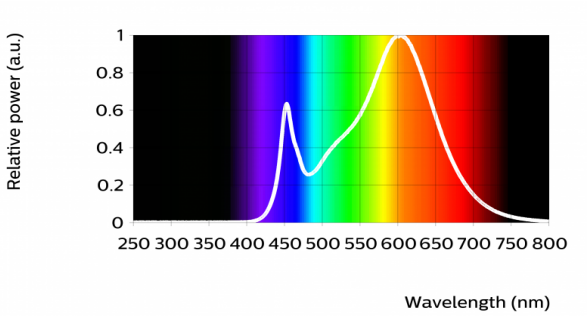

R1	R2	R3	R4	R5	R6	R7	R8	R9	R10	R11	R12	R13	R14
83	95	92	80	84	93	80	58	10	88	79	79	86	96

Fortimo SLM C 930 PW 1211 L19 2828 G7

Parameter	Min	Typ	Max	Unit
Luminous flux	4779	5310	5841	lm
Module efficacy	115	128		lm/W
Correlated color temperature (CCT)		3000		K
Color coordinates (CIEx, CIEy)		(0.422, 0.386)		-
Color consistency			3	SDCM
CRI	90	92		
R9	50			
Photometric code		930/359		

Measurement precision for flux +/- 5%.Measurement precision for efficacy +/- 6%. Measurement precision for x, y +/- 0.005. Measurement precision for CRI 1.5

Operation point	930	lm	lm/W
80% I-nom 960mA	Tc 25 °C	4787	143
	Tc-nom 85 °C	4377	134
	Tc-max 95 °C	4298	133
I-nom 1200mA	Tc 25 °C	5843	137
	Tc-nom 85 °C	5310	128
	Tc-max 95 °C	5207	126
I-max 2000mA	Tc 25 °C	8998	119
	Tc-nom 85 °C	8061	109
	Tc-max 95 °C	7879	107

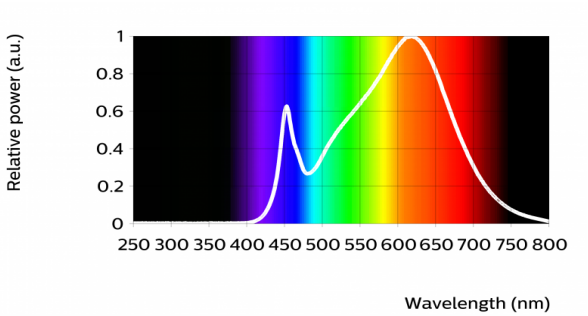

R1	R2	R3	R4	R5	R6	R7	R8	R9	R10	R11	R12	R13	R14

93	97	97	91	93	95	90	80	58	93	91	83	95	99

Fortimo SLM C 935 PW 1211 L19 2828 G7

Parameter	Min	Typ	Max	Unit
Luminous flux	4986	5540	6094	lm
Module efficacy	120	133		lm/W
Correlated color temperature (CCT)		3500		K
Color coordinates (CIEx, CIEy)		(0.398, 0.376)		-
Color consistency			3	SDCM
CRI	90	92		
R9	50			
Photometric code		935/359		

Measurement precision for flux +/- 5%.Measurement precision for efficacy +/- 6%. Measurement precision for x, y +/- 0.005. Measurement precision for CRI 1.5

Operation point	935	lm	lm/W
80% I-nom 960mA	Tc 25 °C	4994	150
	Tc-nom 85 °C	4566	140
	Tc-max 95 °C	4484	138
I-nom 1200mA	Tc 25 °C	6096	143
	Tc-nom 85 °C	5540	133
	Tc-max 95 °C	5432	131
I-max 2000mA	Tc 25 °C	9389	124
	Tc-nom 85 °C	8412	113
	Tc-max 95 °C	8223	111

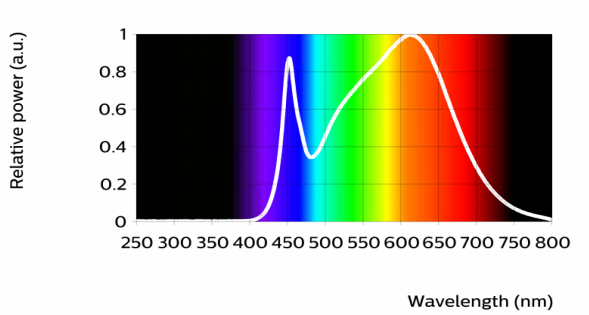

R1	R2	R3	R4	R5	R6	R7	R8	R9	R10	R11	R12	R13	R14
93	96	97	91	92	93	92	82	59	89	91	77	94	98

Fortimo SLM C 940 PW 1211 L19 2828 G7

Parameter	Min	Typ	Max	Unit
Luminous flux	5148	5720	6292	lm
Module efficacy	124	137		lm/W
Correlated color temperature (CCT)		4000		K
Color coordinates (CIEx, CIEy)		(0.374, 0.364)		-
Color consistency			3	SDCM
CRI	90	92		
R9	50			
Photometric code		940/359		

Measurement precision for flux +/- 5%.Measurement precision for efficacy +/- 6%. Measurement precision for x, y +/- 0.005. Measurement precision for CRI 1.5

Operation point	940	lm	lm/W
80% I-nom 960mA	Tc 25 °C	5155	154
	Tc-nom 85 °C	4714	145
	Tc-max 95 °C	4629	143
I-nom 1200mA	Tc 25 °C	6293	148
	Tc-nom 85 °C	5720	137
	Tc-max 95 °C	5609	135
I-max 2000mA	Tc 25 °C	9695	128
	Tc-nom 85 °C	8689	117
	Tc-max 95 °C	8494	115

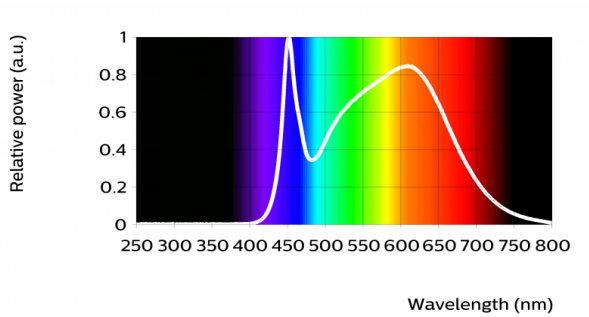

R1	R2	R3	R4	R5	R6	R7	R8	R9	R10	R11	R12	R13	R14
92	96	96	91	92	92	92	83	60	88	90	72	94	97

Beam shape

Bare CoB

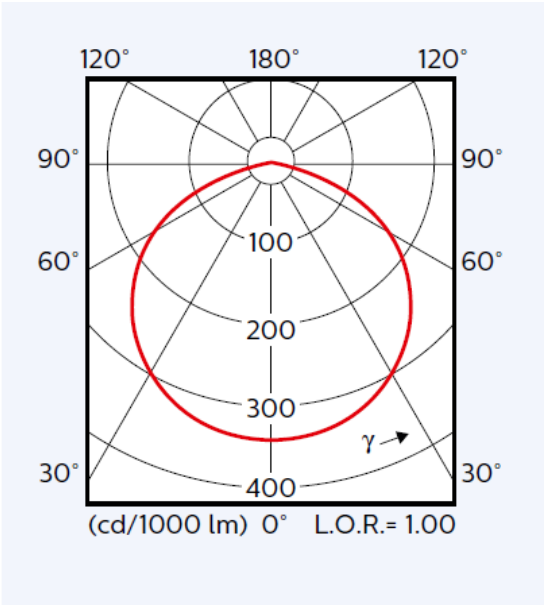

CoB with a standard/ down-light/ Zhaga poke-in holder

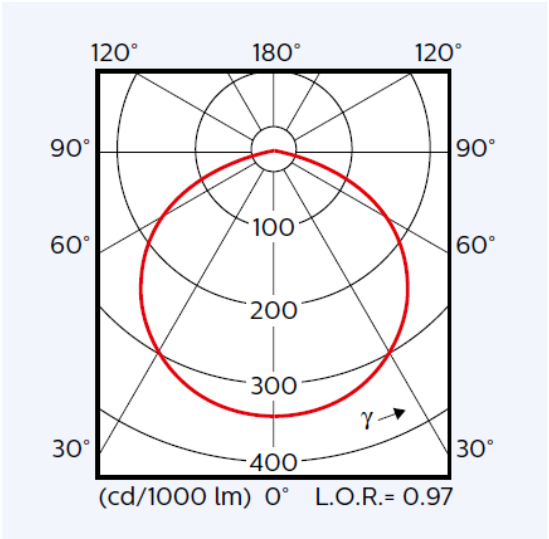

CoB with a poke-in holder

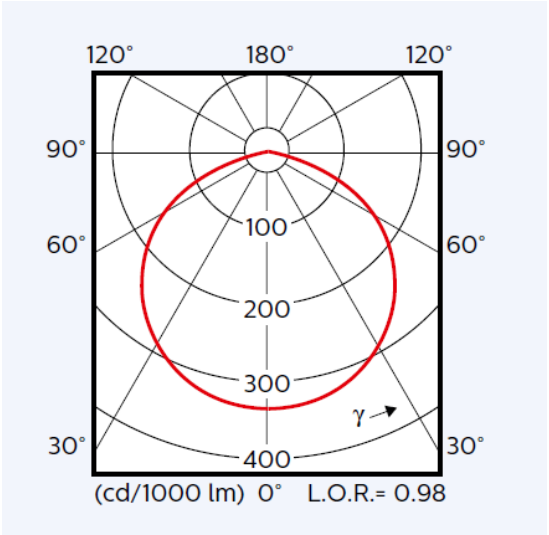

Electrical characteristics

Parameter	Min	Typ	Max	Unit
Forward voltage	32.4	34.7	37.4	V
Power consumption	38.9	41.6	44.9	W
Number of modules in series per chain			1	
Number of modules per chain			1	
Number of modules in parallel			1	

Tuning information

Flux and efficacy versus current (at Tc nominal)

I [mA]	Flux [%]	Efficacy [%]
2000	152	85
1600	127	92
1200	100	100
960	82	105
600	54	114

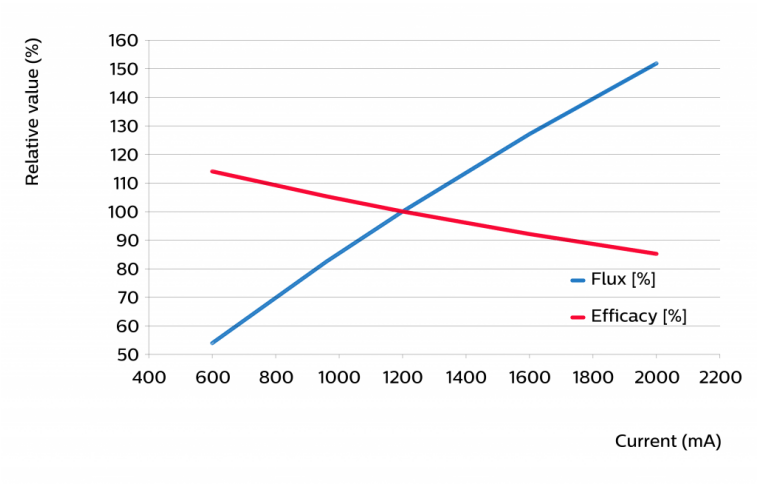

Flux and efficacy versus temperature at Tc (at I nominal)

Tc [°C]	Flux [%]	Efficacy [%]
95	98	98
85	100	100
25	110	107
0	114	110

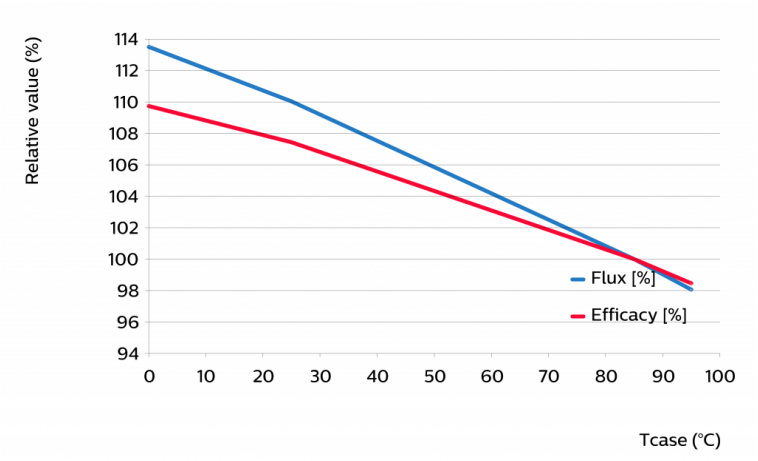

Lumen maintenance

Operation point	Lumen maintenance	L70			L80			L90		
	x 1000 hours	B50	B20	B10	B50	B20	B10	B50	B20	B10
80% i nom 960 mA	Tc 65°C	>50	>50	>50	>50	>50	>50	>50	>50	43
	Tc nom 85°C	>50	>50	>50	>50	50	40	36	24	19
	Tc max 95°C	>50	>50	44	>50	34	27	25	16	13
i nom 1200 mA	Tc 65°C	>50	>50	>50	>50	>50	>50	>50	50	40
	Tc nom 85°C	>50	>50	>50	>50	46	37	33	22	18
	Tc max 95°C	>50	>50	71	48	32	25	23	15	12
I max 2000 mA	Tc 65°C	>50	>50	>50	>50	>50	>50	>50	36	29
	Tc nom 85°C	>50	>50	45	>50	35	28	25	16	13
	Tc max 95°C	>50	39	31	37	24	19	17	11	9

Lifetime

Parameter	Value	Unit
C10 at Tc life	50000	hours

Switching cycles in accordance to EU 1194/2012: >15000
At I life L70B50>50000 hours.
Charts presenting module's lumen maintenance data are available via your sales representative.
Please refer to the performance window to ensure that your operati

Performance Window

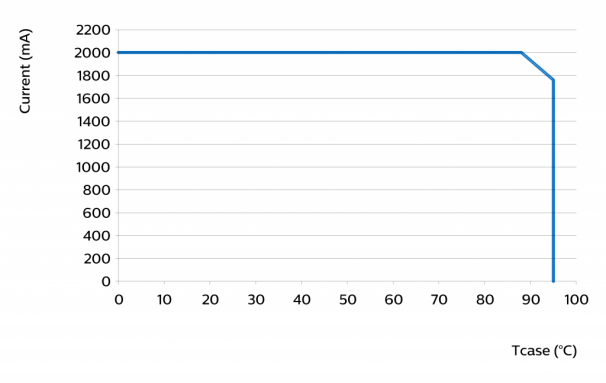

Mechanical characteristics

Parameter	Min	Typ	Max	Unit
Length	27.8	28	28.2	mm
Width	27.8	28	28.2	mm
Height PCB	0.9	1	1.1	mm
Height including dam	1.2	1.5	1.8	mm
Product mass		2.05		gram

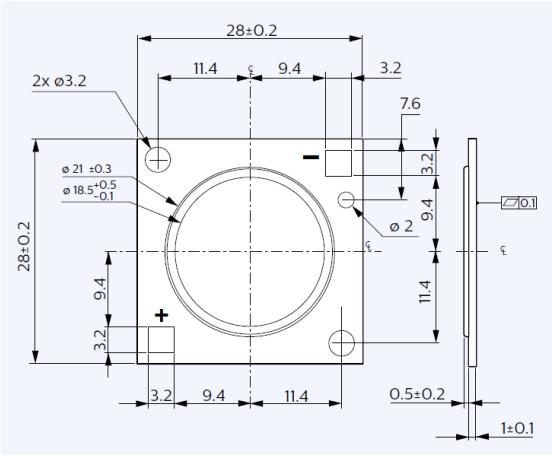

Absolute ratings

Parameter	Min	Max	Unit
Current through the LED module (I-max)		2000	mA
Case temperature (Tc-max)		95	°C
Power at rated Vf-max and I-max		78.1	W
ESD (direct contact)	8		kV
Ambient temperature	-20	40	°C
Storage temperature	-40	80	°C

Application information

Certificates and Standards

IEC 62031:2008/A1:2012/A2:2014
EN 62031:2008/A1:2013/A2:2015
Relevant clauses of IEC 62471:2006 (Incl. IEC/TR 62471-2: 2009 and IEC/TR 62778: 2014)
Relevant clauses of IEC 60838-1:2004/A1:2008/A2:2011 with IEC 60838-2-2:2006 /A1:2012
Relevant clauses of EN 62471:2008 (With IEC/TR 62471-2: 2009 and IEC/TR 62778: 2014)
Relevant clauses of EN 60838-1:2004/A1:2008/A2:2011 with EN 60838-2-2:2006/A1:2012
UL 8750
ENEC+
CE

Environmental

RoHS/REACH

Application	
IP rating	No IP-rating
Overheating protection	No
Luminaire class	IEC Class I and Class II
Dimming	Yes

© 2021 Signify Holding. All rights reserved. This document may be subject to change. No representation or warranty as to the accuracy or completeness of the information included herein is given and any liability for any action in reliance thereon is disclaimed. All trademarks are owned by Signify Holding or their respective owners.

Signify North America Corporation
200 Franklin Square Drive,
Somerset, NJ 08873
Telephone 855-486-2216

Signify Canada Ltd.
281 Hillmount Road,
Markham, ON
Canada L6C 2S3
Telephone 800-668-9008

www.signify.com/advance