Classified

PHILIPS

Signify
I.B.R.S / C.C.R.I. Numero 10461
5600 VB Eindhoven, The Netherlands
Service Hotline:00800-74454775
© 2021 Signify Holding

Removability Induction
on Disposal at End of Life

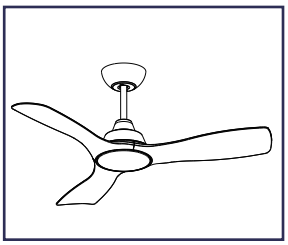

Composition Explanation – Fan ceiling

Plastic part	Electrical part	Metal part
Diffuser 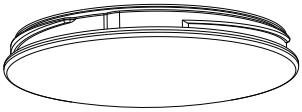	Remote controller and separate control gear 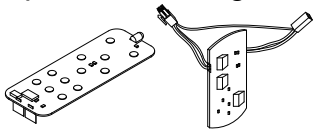	Cover and Iron Ring if have
Blade 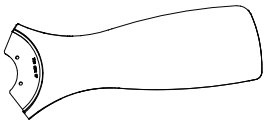	Light Source： PCB 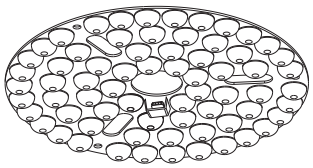	Hanging Frame 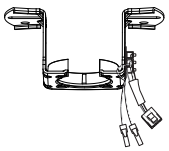
Remote Control Housing 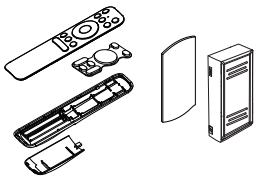	Hanger rod 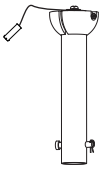	LED Lens 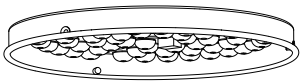
MotorAssembly 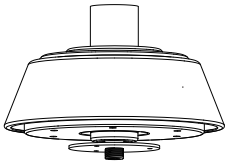	Other Rubber Apron Terminal Cap Wire Plug	Wire 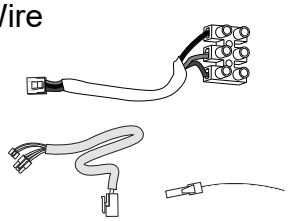

Dismantling
- Steps: refer to disassembly instruction
- Type: without permanent damage

Recommendation on disposal
- Plastic part :reuse and recycling
- Electrical part :incineration and disposal
- Metal part :recycling
- Battery part: recycling

Philips and the Philips shield Emblem are registered trademarks of Koninklijke Philips N.V

Signify
I.B.R.S / C.C.R.I. Numero 10461
5600 VB Eindhoven, The Netherlands
Service Hotline:00800-74454775
© 2021 Signify Holding

Removability Induction
on Disposal at End of Life

•Composition Explanation –Fan ceiling

1

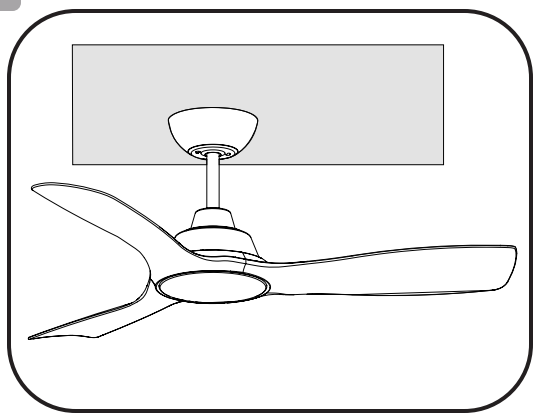

2

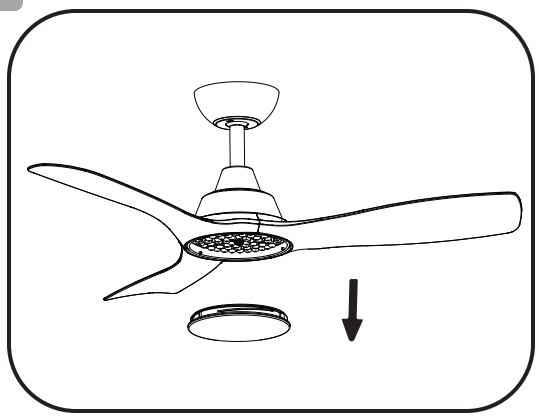

3

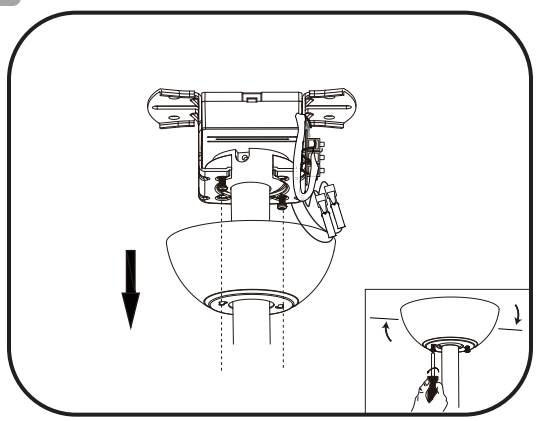

4

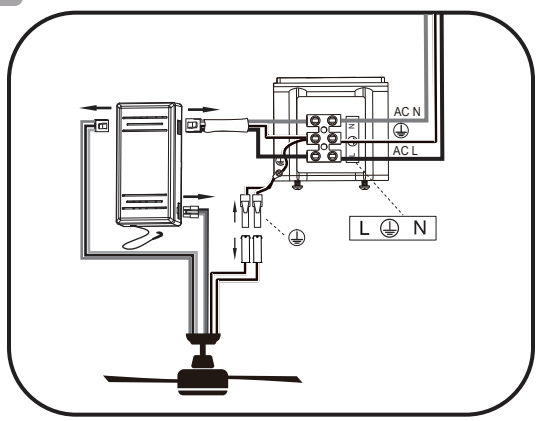

5

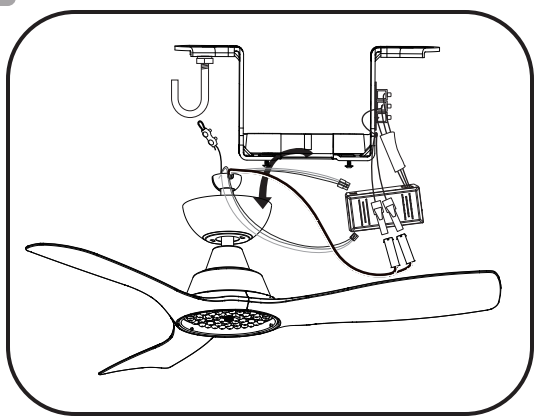

6

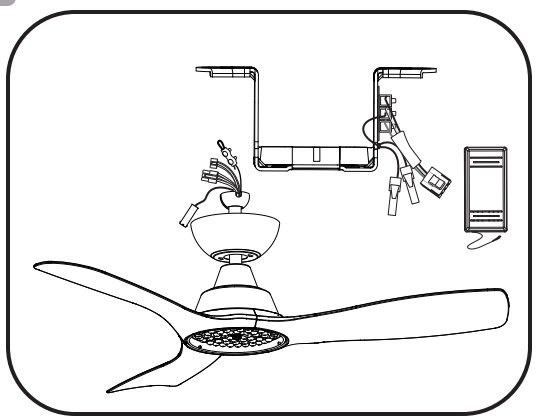

Philips and the Philips shield Emblem are registered trademarks of Koninklijke Philips N.V

Signify
I.B.R.S / C.C.R.I. Numero 10461
5600 VB Eindhoven, The Netherlands
Service Hotline:00800-74454775
© 2021 Signify Holding

Removability Induction
on Disposal at End of Life

•Composition Explanation –Fan ceiling

7

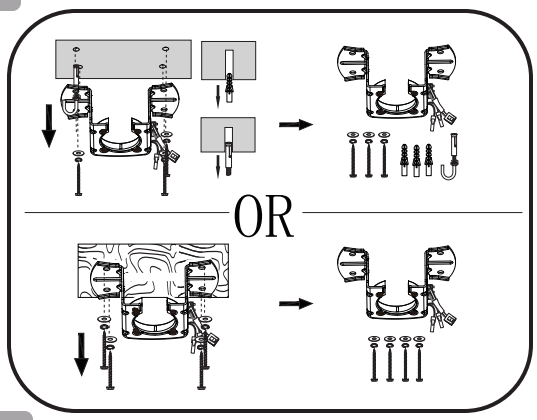

8

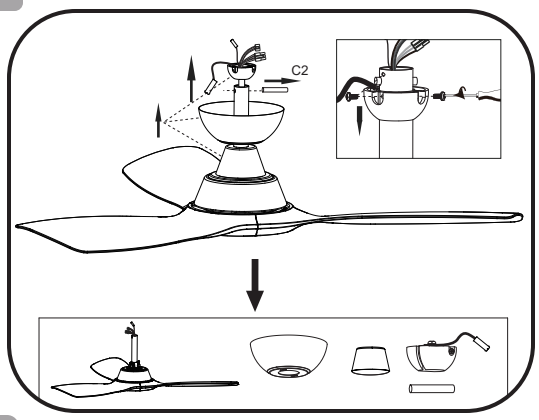

9

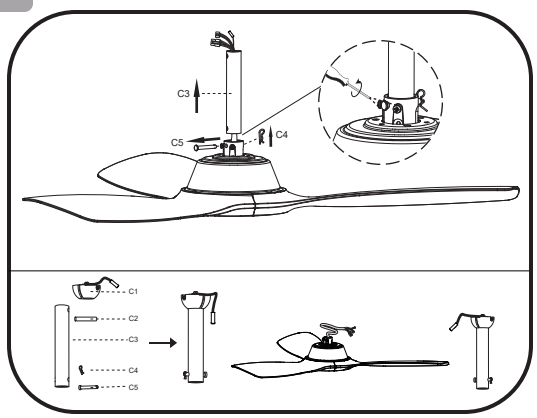

10

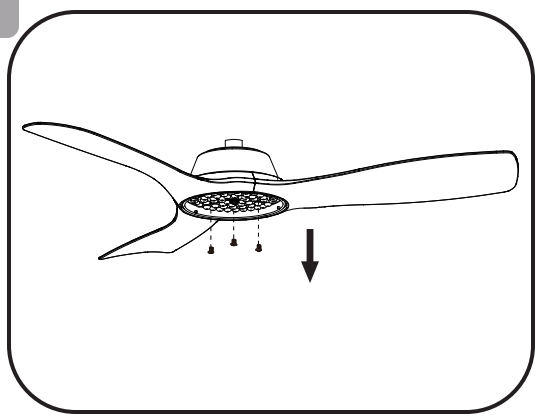

11

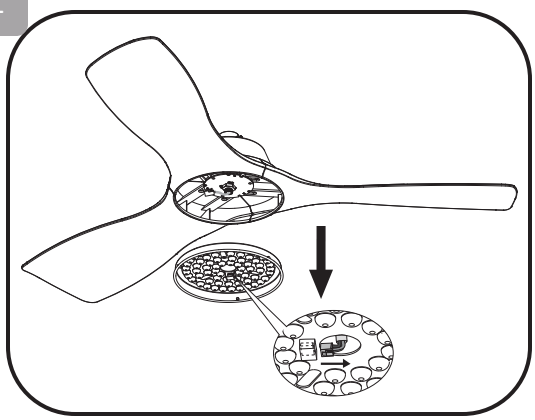

12

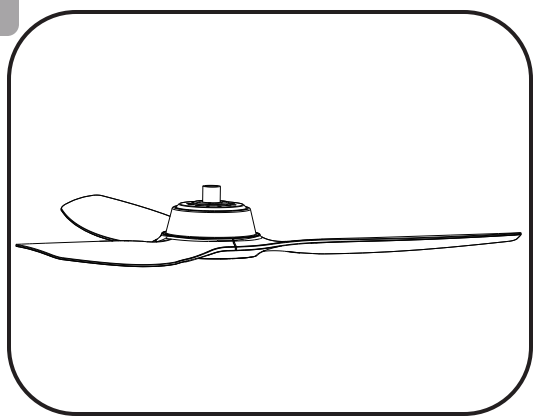

Philips and the Philips shield Emblem are registered trademarks of Koninklijke Philips N.V

Signify
I.B.R.S / C.C.R.I. Numero 10461
5600 VB Eindhoven, The Netherlands
Service Hotline:00800-74454775
© 2021 Signify Holding

Removability Induction
on Disposal at End of Life

•Composition Explanation –Fan ceiling

13

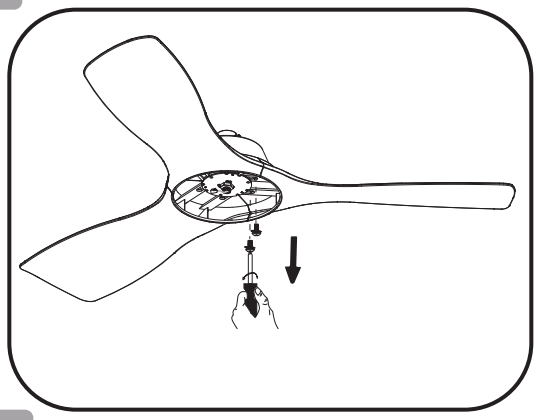

14

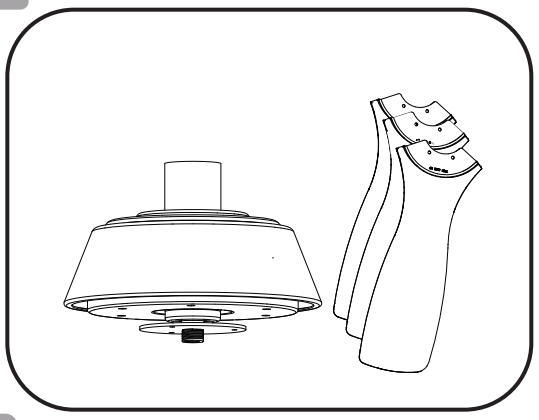

15

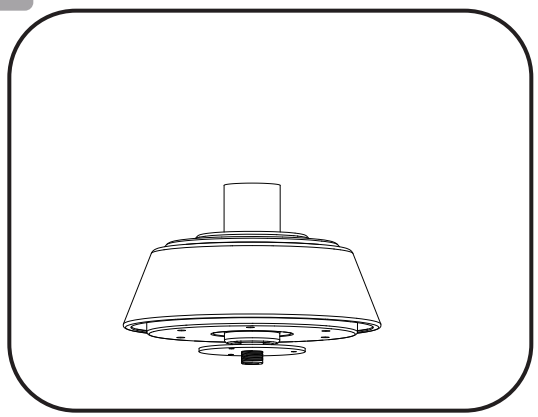

16

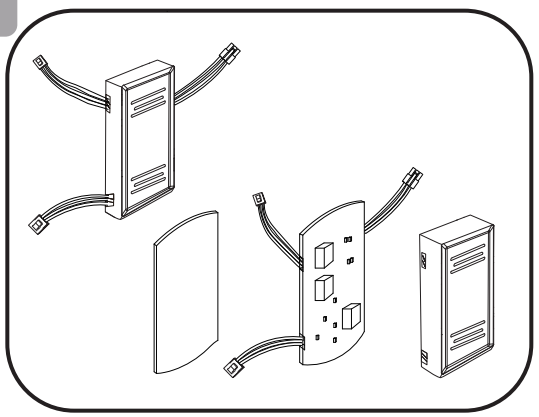

17

Light Source

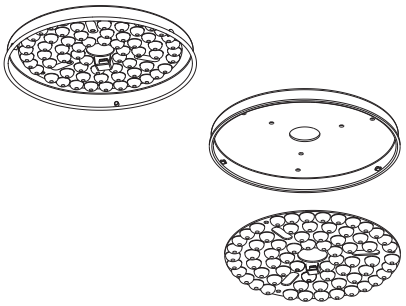

Philips and the Philips shield Emblem are registered trademarks of Koninklijke Philips N.V

Signify
I.B.R.S / C.C.R.I. Numero 10461
5600 VB Eindhoven, The Netherlands
Service Hotline:00800-74454775
© 2021 Signify Holding

Removability Induction
on Disposal at End of Life

•Composition Explanation –Fan ceiling

18

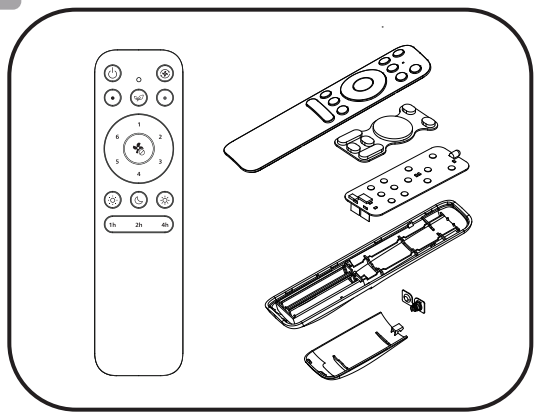

19

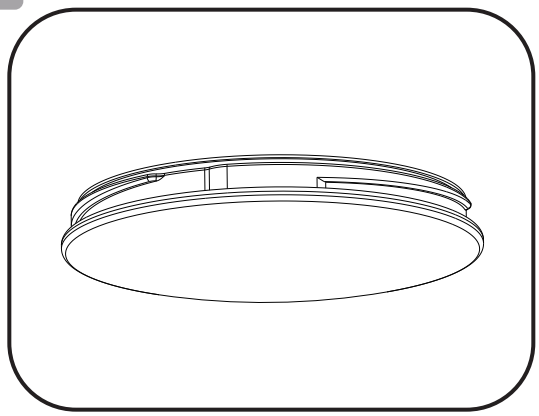

Philips and the Philips shield Emblem are registered trademarks of Koninklijke Philips N.V

Classified

PHILIPS

Signify
I.B.R.S / C.C.R.I. Numero 10461
5600 VB Eindhoven, The Netherlands
Service Hotline:00800-74454775
© 2021 Signify Holding

Light source and control gear replacement instruction

•Composition Explanation –Fan ceiling

1

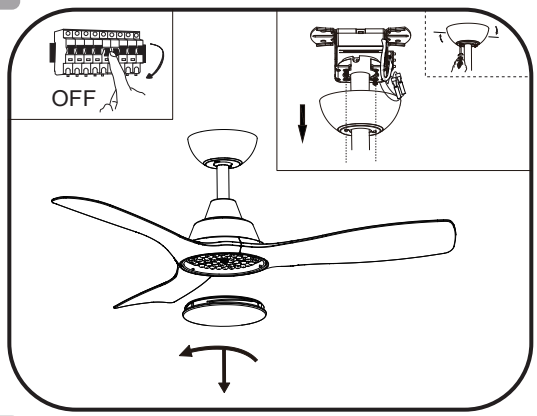

2

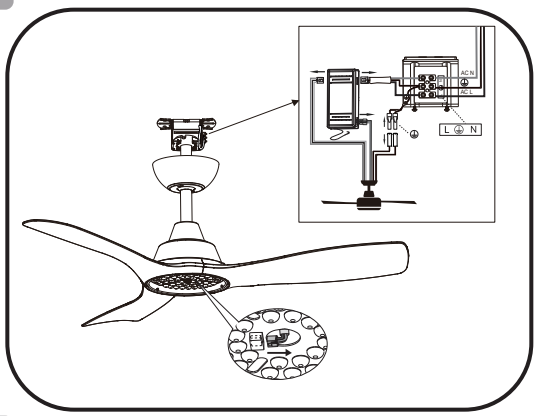

3

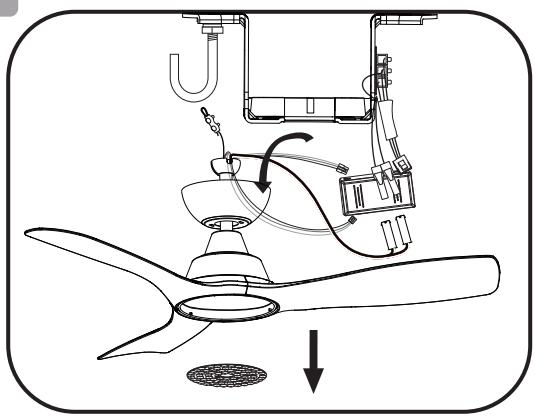

4

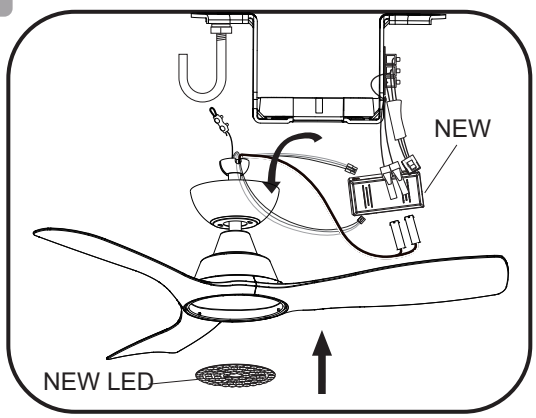

5

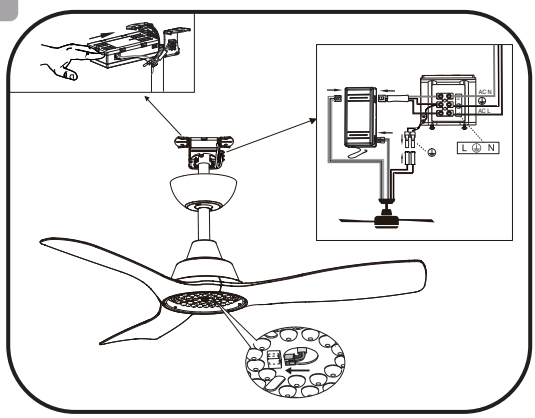

6

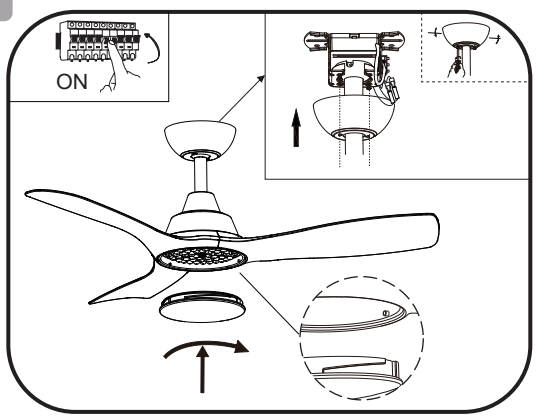

Philips and the Philips shield Emblem are registered trademarks of Koninklijke Philips N.V