Linear

FloatPlane

Suspended

With **FloatPlane**, it's easier than ever to integrate sleek and sporty style into your layout and within budget. Fresh and playful, with Curve and Edge profile options, FloatPlane's performance rivals that of high-end LED luminaires with affordability to fit your budget. FloatPlane supports various smart technologies including SpaceWise wireless controls, connected systems such as Interact Pro and Interact Office and human centric lighting technology such as tunable white which harmonizes lighting with your daily life.

Project:

Location:

Cat.No:

Type:

Line ID: Qty:

Notes:

Ordering guide

example: 24G5LEBAA087DSWNCS, A2-24

Family	Version	Source	CRI/CCT [1]	Lumens [1]	Optics	Distribution	Run Length
24		L			A		
24 FloatPlane	**G5** Edge Suspended **R5** Curve Suspended	**L** LED	**A** 80CRI/4000K **B** 80CRI/3500K **C** 80CRI/3000K **D** 80CRI/2700K **E** 80CRI/5000K **S** 90CRI/3500K **2** CRI 80, 2700-6500K 2ch Tunable White (confirm controls) [5]	**A** 7500 lm/4ft **B** 6000 lm/4ft **C** 4500 lm/4ft **E** 3200 lm/4ft	**A** Acrylic Diffuser	**A** Acrylic Diffuser **D** 45% Down Kit **G** 75% Down Kit **H** 90% Down Kit **J** 100% Down Kit	**04** 4ft **06** 6ft **08** 8ft **xx** Continuous Run (2ft increments)

Wiring Option [2,7]	Voltage	Driver	Finish	Option	System / Controls [10]	Mount Type	Suspension
7 Single Circuit **E** Dual Circuit A/B (Alt. 4' Sections) **M** Single Circuit + Auxiliary Wiring [6] **N** Single Circuit + Battery Pack [3]	**D** UNV 120-277V **3** 347V [3] **D** UNV 120-277V **D** UNV 120-277V	**E** Advance Xitanium 0-10V (1% Dim) **D** Advance Xitanium DALI (5% Dim) [3] **H** Lutron EcoSystem LDE1 (<1% Dim, Fade-to-Black) [3, 14]	**W** Standard White **T** Titanium Silver **B** Black **P** Pacific Aqua **Y** Surf Yellow **F** Factory Color [9] **C** Custom	**N** None **D** Dust Cover [1]	**NN** None **NN** None **VS** Lutron Vive Integral Fixture Control with Sensor - DFCSJ-OEM-OCC [4, 14] **VR** Lutron Vive Integral Fixture Control (RF only) - DFCSJ-OEM-RF [4, 14]	**A1** Non-accessible ceiling, 0°-15° Slope Mount **A2** T-Grid, Fixed Position Mount **A3** Non-accessible ceiling, 0°-90° Slope Mount **A5** T-Grid 24" Span Mount (non tegular tile only) **A6-1** T-Grid On-Grid Mount 15/16" (non tegular tile only) **A6-2** T-Grid On-Grid Mount 9/16" (non tegular tile only) **A6-3** T-Grid On-Grid Mount 9/16" x 5/16" (slot tee & tegular tile)	**24** 24" **48** 48" **96** 96" **144** 144" **192** 192" **240** 240"
7 Single Circuit **N** Single Circuit + Battery Pack [3] **R** Single Circuit + UL924 Sensor Bypass Relay [11]	**D** UNV 120-277V	**S** Advance Xitanium SR (1% Dim) [3]			**NN** None **CS** Interact Pro scalable wireless sensor with integral daylight & occupancy sensing, advanced grouping with dwell time [4, 12] **SB** Interact Pro Enterprise advanced wireless sensor bundle, Integral SC1500 with IoT capabilities for enterprise scale projects [4, 12, 13] **VS** Lutron Vive Integral Fixture Control with Sensor - DFCSJ-OEM-OCC [4] **VR** Lutron Vive Integral Fixture Control (RF only) - DFCSJ-OEM-RF [4]		

1. Nominal values within a range. Consult photometry data for CRI, color temp, lumens & distribution of chosen configuration. Down kits and dust covers reduce optical efficiency.
2. Not all wiring types are available with all configurations. Consult Ledalite for a complete list of available options.
3. 347V not available with Battery Pack, DALI, Lutron EcoSystem or Sensor Ready drivers or SpaceWise DT / Interact Pro or Vive options.
4. Interact options require separate controls hardware by Signify. Vive option requires separate controls hardware by Lutron
5. Tunable White is available. Please enquire about Engineered-to-Order (ETO) options for Tunable White with DALI (DT6 or DT8), 0-10V, or DMX control.
6. Auxiliary Wiring not available with SpaceWise DT, Interact Pro, Interact Office Wired or Vive luminaires.
7. Luminaires are pre-wired to both ends with quick wire connectors at one end for standard circuit & battery pack trigger wire (if applicable). Each circuit has its own neutral conductor. All circuits are clearly labelled at each end. Thru Wire options can provide either one additional set of (4) power and dimming wires (Black/White/Purple/Grey) or one additional battery pack trigger wire (orange) through a selected module, please consult factory for other Thru Wire options.
9. Factory Color includes premium finishes from other Ledalite product families such as those available with EyeLine and ModiFly. Options are shown on page 4. Please specify exact finish when ordering.
10. Sensors are only available in white, but can be combined with any luminaire finish. Other third party sensors also available, please enquire about options for Lutron Athena, or others.
11. UL924 listed sensor bypass relay is factory installed between driver & sensor. Must be ordered with an integral sensing option. Must be installed in conjunction with a UL1008 device.
12. Must order IRT9015 Interact commissioning remote with each system order.
13. This option is qualified as Engineered-to-Order (ETO) ready. Other options not shown here may be possible via an ETO request. Lead times and minimum order quantities may vary, please consult factory.
14. When selecting a Lutron Vive sensor in combination with the Lutron Ecosystem LDE1 driver, the luminaire will include a Lutron Fixture Control Digital Link Interface (DFC-OEM-DBI).

Note: Due to continuing product improvements, Ledalite reserves the right to change the specifications without notice.

FloatPlane suspended

Cross Section View

Edge

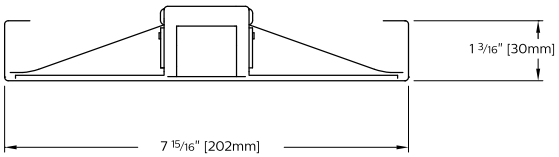

Curve

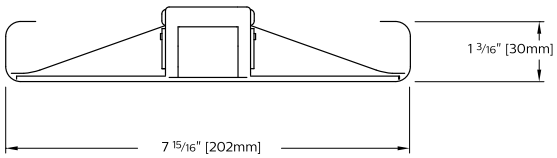

Module Details & Dimensions

Edge

4 ft

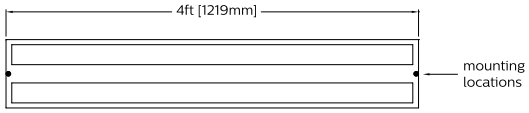

6 ft

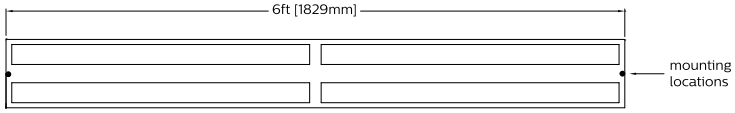

8 ft

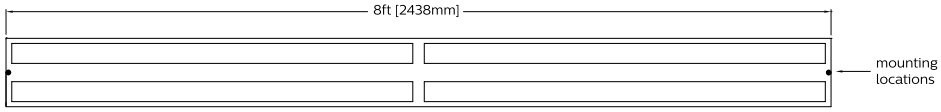

Curve

4 ft

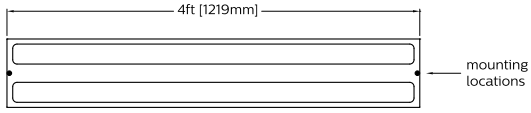

6 ft

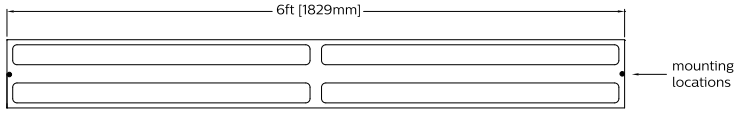

8 ft

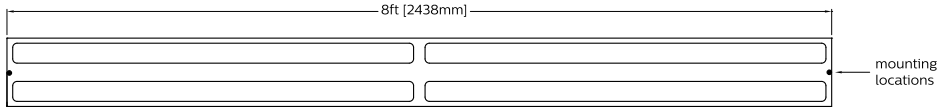

Cross Section View – Endcaps

Edge

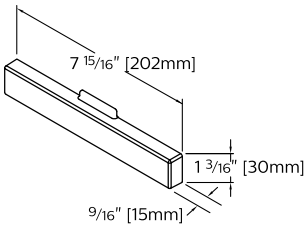

Curve

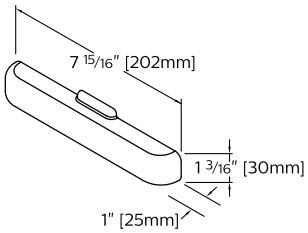

Finish Options

- White
- Titanium Silver
- Black
- Graphite Grey
- Surf Yellow
- Pacific Aqua
- Racing Red
- Hero Gold (Gloss)
- Silver Nova (Gloss)
- Venom Black (Textured)
- Custom

FloatPlane suspended

Specifications

Optical System

White light emitted from dual linear arrays of lateral facing LEDs is diffused and redirected into the upper and lower hemispheres with a combination of high reflectivity elements and acrylic diffusers. This delivers a highly efficient 70% up / 30% down indirect/direct distribution with a wide, homogeneous batwing distribution in the upper hemisphere. Twin polymer diffusers on the lower surface combine for a visible optical aperture of 4-1/2" to deliver a uniform, controlled brightness, maximizing visual comfort and luminaire efficacy. Factory or field installable variable optics kits are available to modify the distribution to 45%, 75%, 90% or close to 100% down light. Field installable dust covers are available for suspended versions.

Housing

Precision formed 18 gauge cold-rolled steel.
Approx. cross section size: 1.2"h x 8"w

Endcaps

Diecast aluminum endcaps in either Edge or Curve versions to match housing.

Finish

High quality powder coated, available in standard Matte White, Black, Titanium Silver, or Graphite Grey. Other premium factory colors such as Pacific Aqua, Surf Yellow, Racing Red, Hero Gold, Silver Nova and Venom Black are available for a small per ft. upcharge. FloatPlane can also be specified in any custom color upon request for a one-time setup charge. Finishes other than standard white can result in up to 15% drop in efficacy. Optional sensors (such as SpaceWise and Interact) available in white only.

Mounting

Rapid installation sling mount at joints and ends. High strength aircraft cable and stainless-steel gripper provide unlimited vertical adjustment and are independently tested to stringent safety standards.

Joints

Self-aligning, gasketed joining system. Access panels in the driver channel allow quick and hassle-free wiring of modules either before or after mechanical joints are completed.

Weight

Maximum 3.5lb/ft.

Electrical

Fixtures are factory pre-wired to section ends with quick-wire connectors and tested for all circuits and backup battery packs. LED boards and drivers are easily field replaceable with access from below the ceiling.

Standard Drivers

Advance Xitanium 0-10V, 1% Dimming.
Advance Xitanium DALI, 5% Dimming.
Advance Xitanium Sensor Ready, 1% Dimming.
Lutron EcoSystem LDE1, 1% Dimming with Soft-On and Fade-to-Black.
Class 2 rated output. Consult Ledalite for other available drivers.

Standard Battery Packs

Bodine Battery Pack, 90 min, 10W, Class 2 rated output.
Lumen output = 10W x luminaire efficacy x 1.1. Typical output ~1200lm.

Lumen Maintenance

LEDs have been tested by the manufacturer in accordance with IESNA LM-80-15. At an ambient temperature of 25°C, the LED lumen maintenance expectation according to IES TM-21-11 is:

L_{90} (10k) > 60,000 hours (Reported methodology).

Source Color

LEDs rated for color rendering of:

CRI $R_a \geq 80$, $R_9 \geq 0$
CRI $R_a \geq 90$, $R_9 \geq 50$, $G_a \geq 97$, $C_9 \geq 90$
IES TM-30-18 : $R_f \geq 90$, $R_{f,h1} \geq 89$, $R_g \geq 99$, $R_{cs,h1} \geq -5\%$

SPD and TM-30-18 reports available upon request

Fixture to fixture color accuracy within:
2 SDCM for Static White luminaires
3 SDCM for Tunable White luminaires

Approvals

Certified to UL, IES & CSA Standards.

Complies in accordance with CAN ICES-005-A/NEB-005-A & FCC Part 15-A.

Certain versions without battery packs are DesignLights Consortium® qualified. Please see the DLC QPL list for exact catalog numbers.
www.designlights.org/QPL

Environment

Rated for dry or damp locations in operating ambient temperatures of 0-25°C (32-77°F).

Many luminaire components, such as reflectors, refractors, lenses, and LEDs are made from various types of plastics which can be adversely affected by airborne contaminants. If sulfur-based chemicals, petroleum-based products, cleaning solutions, or other contaminants are expected in the intended area of use, consult factory for compatibility. Damage caused by sulfur, chlorine, petroleum-based solution, or other contaminants are not covered under warranty. Not suitable for natatorium environments.

Warranty

Five-year luminaire limited warranty including LED boards and driver:
www.signify.com/warranties

QuickShip

10-day QuickShip available for most configurations upon request. More information available at: www.signify.com/en-us/brands/ledalite/quickship

FloatPlane suspended

Wireless Controls Options

SpaceWise DT (SZ):

- Standalone daylight and occupancy sensing with advanced grouping, wireless mesh networking and dwell time.
- Commissioning via compatible Android phone and Philips Field App.
- Dimming via compatible Zigbee wireless wall switch only (see link below for details).
- Register for the commissioning app at: registration.componentcloud.philips.com/appregistration/
- For more information including recommended switches, refer to the following: www.usa.lighting.philips.com/systems/lighting-systems/spacewise

Interact Pro scalable sensor for Foundation, Advanced & Enterprise tiers (CS an evolution of SpaceWise):

- CS is a connected sensor with integral occupancy and daylight sensing and supports wireless mesh connectivity.
- The sensor works in the Foundation mode (similar to SpaceWise) when configured without a gateway or in an Interact Pro Advanced or Enterprise mode if a compatible gateway is used.
- Interact Pro includes an App, a portal and a broad portfolio of wireless luminaires, lamps and retrofit kits all working on the same system.
- Startup is implemented via Interact Pro App (Android or iPhone) & Bluetooth connectivity. The App provides flexibility to choose between a gateway or non gateway mode for setup.
- Setup with the gateway requires wired internet access to the gateway. It is possible to add a gateway at a later point.
- Prepare project configuration steps remotely and use IRT9015 remote onsite to identify and group devices together.
- Compatible with UID8451/10 wireless dimmer switch, SWS200 wireless scene switch, wireless Occ sensor (OCC SENSOR IA CM IP42 WH 10/1) and wireless Day/Occ sensor (OCC MULTI SENSOR IA CM WH 10/1).
- For more information on Interact Pro visit: www.interact-lighting.com/interactproscalablesystem

Emergency Options (R):

- Power Sensing (Factory default) – Recommended
- UL924 option requires unswitched power sense line, absence of voltage on the normal circuit triggers luminaire to 100% output.
- Power Interruption Detection (Field option)
- Detects AC power interruption >30ms triggers 90 minute emergency mode with luminaire at 100% output.

Interact Pro scalable sensor bundles for Enterprise tier (SB):

- SB option, in addition to occupancy and daylight sensing, supports advanced IoT capabilities such as people estimation analysis, desk level temperature & humidity sensing, noise classification, and BLE beacon.
- Compatible with UID8451/10 wireless dimmer switch, SWS200 wireless scene switch, wireless Occ sensor (OCC SENSOR IA CM IP42 WH 10/1) and wireless Day/Occ sensor (OCC MULTI SENSOR IA CM WH 10/1).
- Use Interact software and insights to increase building efficiency, achieve building wide integration and optimize space through occupancy analytics.
- Requires compatible Gateway and internet connectivity for commissioning. For more information, visit: www.interact-lighting.com/office

Wired Controls Options

Tunable White:

- Control options for Tunable White with DALI (DT6 or DT8), 0-10V, or DMX control are available via an Engineered-to-Order (ETO) request.
- Signify tunable white solutions are designed to help maximize the influence of lighting on your daily life.
- Dynamic behaviors via scheduled lighting recipes mimicking daylight patterns or supporting biorhythms.
- Scene setting via lighting pre-sets based on various combinations of lighting color temperature and intensity.

FloatPlane suspended

Functionalities overview

	The three tiers of Interact		
	Standalone	Gateway	Gateway + IoT
Dimming, grouping, and zoning	✓	✓	✓
Bluetooth and ZigBee enabled	✓	✓	✓
Motion sensing and daylight harvesting	✓	✓	✓
Integration with 0-10V and phase dimming fixtures	✓	✓	✓
Code compliance	✓	✓	✓
Granular dimming and dwell time	✓	✓	✓
New Correlated color temperature (CCT) tuning by switch	✓	✓	✓
New Support for sensor-based Tunable White luminaires	✓	✓	✓
Energy reporting and monitoring		✓	✓
Scheduling		✓	✓
Demand response		✓	✓
BMS integration (BACnet)			✓
Floor plan visualization			✓
IoT sensors for wellness			✓
IoT Apps for productivity			✓

Currently supported maximum system size

To be able to design the lighting system correctly for the customer, it is important to know the prime characteristics of the system, its possibilities and limitations.

System level	
Total number of gateways	Unlimited
Total number of devices	200 per network
• luminaires with integrated sensors	150
• smart TLEDS	150
Total number of ZGP devices (sensors and switches)	50
• sensors	30
• switches	50
• zones and groups	64
Group level	
Recommended number of lights	40 (recommended 25)
Number of ZGP devices	5
Number of scenes	16

Interact system architecture for office, education, healthcare, retail, industrial and parking applications

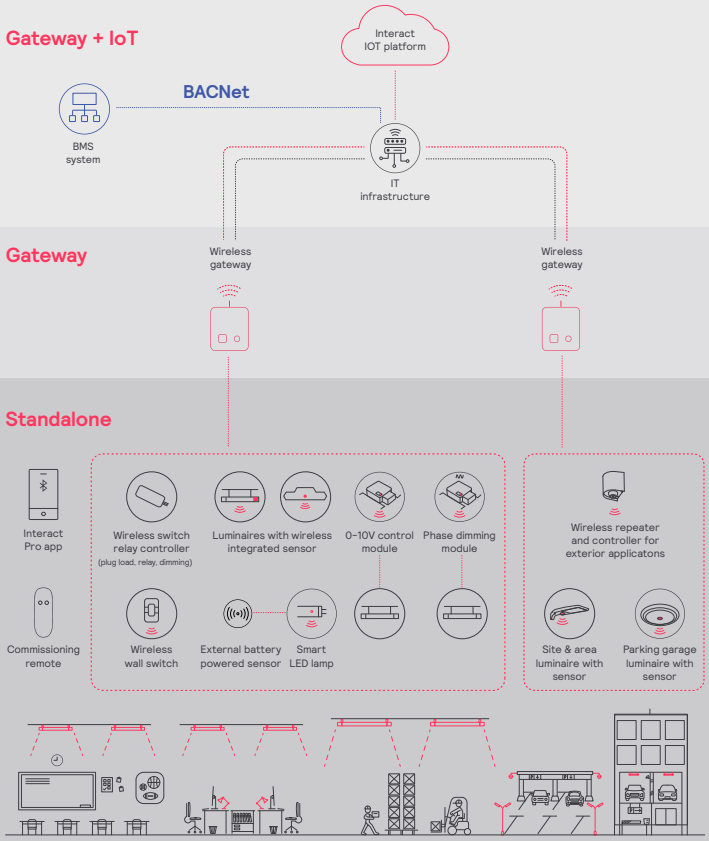

FloatPlane suspended

Photometrics

Acrylic Diffusers (AA)

(Click "PDF" and "IES" text to Download)

Lumen Package	Nominal CRI & CCT	Flux (lm)	Power [1] (W)	Efficacy [1] (LPW)	CRI	R9	RP-1 VDT	DLC*	Photometry Report	IES File
7500 lm/4ft	80CRI, 4000K	7459	53.7	138.9	82	10	Normal spaces	Premium	PDF	IES
	80CRI, 3500K	7602	53.7	141.6	82	9	Normal spaces	Premium	PDF	IES
	80CRI, 3000K	7388	53.4	138.4	83	9	Normal spaces	Premium	PDF	IES
	90CRI, 3500K	7497	65.5	114.5	93	65	Normal spaces	Standard	PDF	IES
6000 lm/4ft	80CRI, 4000K	6031	42.3	142.6	82	10	Critcal spaces	Premium	PDF	IES
	80CRI, 3500K	6146	42.3	145.3	82	9	Critcal spaces	Premium	PDF	IES
	80CRI, 3000K	5973	42.3	141.2	83	9	Critcal spaces	Premium	PDF	IES
	90CRI, 3500K	6005	51.8	115.9	93	65	Critcal spaces	Standard	PDF	IES
4500 lm/4ft	80CRI, 4000K	4523	31.5	143.6	82	10	Critcal spaces	Premium	PDF	IES
	80CRI, 3500K	4610	31.5	146.3	82	9	Critcal spaces	Premium	PDF	IES
	80CRI, 3000K	4480	31.5	142.2	83	9	Critcal spaces	Premium	PDF	IES
	90CRI, 3500K	4525	37.8	119.7	93	65	Critcal spaces	Standard	PDF	IES
3200 lm/4ft	80CRI, 4000K	3215	22.3	144.2	82	10	Critcal spaces	Premium	PDF	IES
	80CRI, 3500K	3276	22.3	146.9	82	9	Critcal spaces	Premium	PDF	IES
	80CRI, 3000K	3184	22.3	142.8	83	9	Critcal spaces	Premium	PDF	IES
	90CRI, 3500K	3199	26.2	122.1	93	65	Critcal spaces	Standard	PDF	IES

* Luminaire finishes other than White and/or configurations specified with Tunable White, PoE or Battery Packs are not DLC qualified.

[1] Data on this page is for Advance 0-10V and Sensor Ready configurations. For Interact Office wired (PoE) configurations, power will be lower and efficacy higher. Consult factory for information.

CANDELA DISTRIBUTION						Flux
	0	22.5	45	67.5	90	Lumens
0	307	307	307	307	307	
5	304	306	305	305	305	29
15	292	295	293	294	291	83
25	271	274	270	271	267	125
35	241	242	236	238	233	149
45	202	204	197	197	194	154
55	155	158	151	152	148	137
65	108	110	102	103	99	103
75	58	60	53	54	51	59
85	15	18	11	10	8	15
90	0	0	0	0	0	
95	37	65	135	121	198	126
105	115	175	384	519	618	372
115	183	285	484	609	656	444
125	243	349	520	615	651	432
135	290	379	518	609	642	381
145	325	390	498	576	600	302
155	348	388	463	524	540	211
165	361	380	416	454	461	118
175	368	371	375	386	382	37
180	368	368	368	368	368	

*Photometric data shown is for 3200 lm/4ft, 3500K, 80 CRI configuration.

AccuRender technology with CRI 90 available now, photometry coming soon.

COEFFICIENTS OF UTILIZATION (%)											
Pc---	80				70			50			0
Pw---	70	50	30	10	70	50	30	50	30	10	0
RCR											
0	101	101	101	101	90	90	90	70	70	70	26
1	92	88	84	81	82	79	76	61	59	57	22
2	84	77	71	66	75	69	64	53	50	47	18
3	77	67	60	55	68	60	54	47	43	39	15
4	70	60	52	46	62	53	47	42	37	33	13
5	64	53	45	39	57	47	41	37	32	29	11
6	59	47	39	34	52	42	36	33	28	25	10
7	54	42	35	29	48	38	32	30	25	22	9
8	50	38	31	26	45	35	28	27	22	19	8
9	47	35	28	23	41	31	25	25	20	17	7
10	43	32	25	20	39	29	23	23	18	15	6

AVG LUMINANCE (cd/m²)			
	0	45	90
0	1515	1515	1515
5	1509	1510	1513
15	1492	1497	1488
25	1478	1471	1454
35	1450	1424	1406
45	1410	1376	1353
55	1333	1299	1273
65	1256	1194	1156
75	1103	1008	966
85	833	623	476

ZONAL LUMEN SUMMARY			
Zone	Lumens	%Fixture	%Lamp
0-30	236	7.2%	7.2%
0-40	385	11.8%	11.8%
0-60	676	20.6%	20.6%
0-90	853	26.0%	26.0%
90-130	1375	42.0%	42.0%
90-150	2058	62.8%	62.8%
90-180	2423	74.0%	74.0%
0-180	3276	100.0%	100.0%

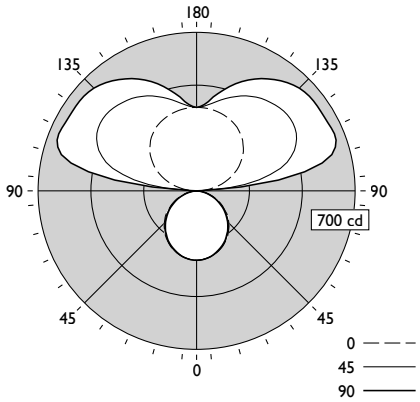

74% Up / 26% Down

Electrical				
Voltage (V)	Power (W)	Current (A)	THD (%)	Power factor
120	22.3	0.186	11.6	0.997
277	22.3	0.186	12.7	0.938
347	22.3	0.068	9.6	0.952

FloatPlane suspended

Photometrics

Acrylic Diffusers + 45% Down Kit (AD)

(Click "PDF" and "IES" text to Download)

Lumen Package	Nominal CRI & CCT	Flux (lm)	Power [1] (W)	Efficacy [1] (LPW)	CRI	R9	RP-1 VDT	DLC*	Photometry Report	IES File
7500 lm/4ft	80CRI, 4000K	6793	53.7	126.5	82	10	N/A	Standard	PDF	IES
	80CRI, 3500K	6923	53.7	128.9	82	9	N/A	Standard	PDF	IES
	80CRI, 3000K	6728	53.4	126.0	83	9	N/A	Standard	PDF	IES
	90CRI, 3500K	6788	65.5	103.6	93	65	N/A	Standard	PDF	IES
6000 lm/4ft	80CRI, 4000K	5492	42.3	129.8	82	10	N/A	Standard	PDF	IES
	80CRI, 3500K	5597	42.3	132.3	82	9	N/A	Premium	PDF	IES
	80CRI, 3000K	5439	42.3	128.6	83	9	N/A	Standard	PDF	IES
	90CRI, 3500K	5468	51.8	105.6	93	65	N/A	Standard	PDF	IES
4500 lm/4ft	80CRI, 4000K	4119	31.5	130.8	82	10	Normal spaces	Standard	PDF	IES
	80CRI, 3500K	4198	31.5	133.3	82	9	Normal spaces	Premium	PDF	IES
	80CRI, 3000K	4080	31.5	129.5	83	9	Normal spaces	Standard	PDF	IES
	90CRI, 3500K	4120	37.8	109.0	93	65	Normal spaces	Standard	PDF	IES
3200 lm/4ft	80CRI, 4000K	2928	22.3	131.3	82	10	Critcal spaces	N/A	PDF	IES
	80CRI, 3500K	2983	22.3	133.8	82	9	Critcal spaces	N/A	PDF	IES
	80CRI, 3000K	2900	22.3	130.0	83	9	Critcal spaces	N/A	PDF	IES
	90CRI, 3500K	2913	26.2	111.2	93	65	Critcal spaces	Standard	PDF	IES

* Luminaire finishes other than White and/or configurations specified with Tunable White, PoE or Battery Packs are not DLC qualified.

[1] Data on this page is for Advance 0-10V and Sensor Ready configurations. For Interact Office wired (PoE) configurations, power will be lower and efficacy higher. Consult factory for information.

CANDELA DISTRIBUTION						Flux
	0	22.5	45	67.5	90	Lumens
0	493	493	493	493	493	
5	489	491	490	491	489	47
15	469	473	470	472	470	133
25	434	437	434	434	431	200
35	385	389	383	383	377	240
45	321	328	318	321	311	248
55	252	257	246	248	242	223
65	172	176	167	169	163	168
75	91	97	89	88	86	97
85	24	28	19	21	15	26
90	0	0	0	0	0	
95	19	35	70	77	79	65
105	66	104	211	273	308	202
115	112	195	345	413	435	301
125	141	239	401	486	515	323
135	161	247	387	477	506	279
145	174	239	348	427	453	209
155	183	223	297	361	375	135
165	188	206	241	280	283	69
175	190	192	198	207	205	20
180	189	189	189	189	189	

*Photometric data shown is for 3200 lm/4ft, 3500K, 80 CRI configuration.

AccuRender technology with CRI 90 available now, photometry coming soon.

COEFFICIENTS OF UTILIZATION (%)											
Pc---	80				70			50			0
Pw---	70	50	30	10	70	50	30	50	30	10	0
RCR											
0	106	106	106	106	98	98	98	81	81	81	46
1	97	92	89	85	89	85	82	71	69	66	39
2	88	81	74	69	81	74	69	62	58	55	32
3	80	71	63	57	73	65	59	55	50	46	27
4	73	62	55	48	67	58	51	48	43	39	23
5	67	56	47	41	61	51	44	43	38	33	20
6	62	50	42	36	57	46	39	39	33	29	17
7	57	45	37	31	52	41	34	35	30	26	15
8	53	41	33	28	48	38	31	32	27	23	14
9	49	37	30	24	45	34	28	29	24	20	12
10	46	34	27	22	42	32	25	27	22	18	11

ZONAL LUMEN SUMMARY			
Zone	Lumens	%Fixture	%Lamp
0-30	380	12.7%	12.7%
0-40	620	20.8%	20.8%
0-60	1091	36.6%	36.6%
0-90	1382	46.3%	46.3%
90-130	891	29.9%	29.9%
90-150	1378	46.2%	46.2%
90-180	1602	53.7%	53.7%
0-180	2983	100.0%	100.0%

Electrical				
Voltage (V)	Power (W)	Current (A)	THD (%)	Power factor
120	22.3	0.186	11.6	0.997
277	22.3	0.186	12.7	0.938
347	22.3	0.068	9.6	0.952

AVG LUMINANCE (cd/m²)			
	0	45	90
0	2435	2435	2435
5	2426	2428	2427
15	2400	2402	2403
25	2366	2366	2348
35	2323	2312	2271
45	2241	2220	2172
55	2169	2117	2086
65	2015	1957	1899
75	1740	1699	1634
85	1366	1060	856

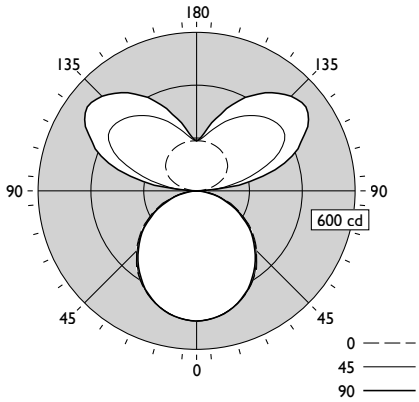

54% Up / 46% Down

FloatPlane suspended

Photometrics

Acrylic Diffuser & 75% Down Kit (AG)

Spacing Criteria: 1.28/1.26

(Click "PDF" and "IES" text to Download)

Lumen Package	Nominal CRI & CCT	Flux (lm)	Power [1] (W)	Efficacy [1] (LPW)	CRI	R9	RP-1 VDT	DLC*	Photometry Report	IES File
7500 lm/4ft	80CRI, 4000K	5894	53.7	109.8	82	10	N/A	Standard	PDF	IES
	80CRI, 3500K	6007	53.7	111.9	82	9	N/A	Standard	PDF	IES
	80CRI, 3000K	5838	53.4	109.3	83	9	N/A	Standard	PDF	IES
	90CRI, 3500K	5924	65.5	90.4	93	65	N/A	N/A	PDF	IES
6000 lm/4ft	80CRI, 4000K	4765	42.3	112.6	82	10	N/A	Standard	PDF	IES
	80CRI, 3500K	4856	42.3	114.8	82	9	N/A	Standard	PDF	IES
	80CRI, 3000K	4720	42.3	111.6	83	9	N/A	Standard	PDF	IES
	90CRI, 3500K	4745	51.8	91.6	93	65	N/A	N/A	PDF	IES
4500 lm/4ft	80CRI, 4000K	3574	31.5	113.5	82	10	N/A	Standard	PDF	IES
	80CRI, 3500K	3642	31.5	115.6	82	9	N/A	Standard	PDF	IES
	80CRI, 3000K	3540	31.5	112.4	83	9	N/A	Standard	PDF	IES
	90CRI, 3500K	3575	37.8	94.6	93	65	N/A	N/A	PDF	IES
3200 lm/4ft	80CRI, 4000K	2540	22.3	113.9	82	10	Normal spaces	Standard	PDF	IES
	80CRI, 3500K	2589	22.3	116.1	82	9	Normal spaces	Standard	PDF	IES
	80CRI, 3000K	2516	22.3	112.8	83	9	Normal spaces	Standard	PDF	IES
	90CRI, 3500K	2528	26.2	96.5	93	65	Normal spaces	N/A	PDF	IES

* Luminaire finishes other than White and/or configurations specified with Tunable White, PoE or Battery Packs are not DLC qualified.

[1] Data on this page is for Advance 0-10V and Sensor Ready configurations. For Interact Office wired (PoE) configurations, power will be lower and efficacy higher. Consult factory for information.

CANDELA DISTRIBUTION						Flux
	0	22.5	45	67.5	90	Lumens
0	675	675	675	675	675	
5	670	672	670	672	670	64
15	643	647	643	645	641	182
25	593	601	593	596	588	274
35	526	534	523	527	517	329
45	443	447	436	443	430	340
55	341	351	339	341	330	305
65	235	242	234	233	223	233
75	126	135	124	128	117	136
85	35	40	32	33	23	39
90	0	0	0	0	0	
95	10	15	31	31	46	31
105	37	42	85	120	142	88
115	69	78	120	158	176	118
125	91	107	142	167	181	124
135	104	120	155	176	186	115
145	112	126	155	178	188	95
155	118	127	146	163	169	67
165	121	124	134	144	146	38
175	122	123	124	125	126	12
180	122	122	122	122	122	

*Photometric data shown is for 3200 lm/4ft, 3500K, 80 CRI configuration.

AccuRender technology with CRI 90 available now, photometry coming soon.

COEFFICIENTS OF UTILIZATION (%)											
Pc---	80				70			50			0
Pw---	70	50	30	10	70	50	30	50	30	10	0
RCR											
0	113	113	113	113	107	107	107	96	96	96	73
1	103	98	94	90	97	93	90	84	81	79	61
2	93	85	79	73	88	81	75	74	69	65	51
3	85	75	67	61	80	71	64	65	59	54	43
4	78	66	58	52	74	63	56	57	51	46	37
5	71	59	51	44	68	56	49	51	45	40	32
6	66	53	45	38	62	51	43	46	40	35	28
7	61	48	40	34	58	46	38	42	35	31	24
8	57	44	36	30	54	42	34	38	32	27	22
9	53	40	32	27	50	38	31	35	29	25	20
10	49	37	29	24	47	35	28	33	26	22	18

ZONAL LUMEN SUMMARY			
Zone	Lumens	%Fixture	%Lamp
0-30	520	20.1%	20.1%
0-40	849	32.8%	32.8%
0-60	1495	57.7%	57.7%
0-90	1901	73.4%	73.4%
90-130	360	13.9%	13.9%
90-150	570	22.0%	22.0%
90-180	687	26.6%	26.6%
0-180	2589	100.0%	100.0%

Electrical				
Voltage (V)	Power (W)	Current (A)	THD (%)	Power factor
120	22.3	0.186	11.6	0.997
277	22.3	0.186	12.7	0.938
347	22.3	0.068	9.6	0.952

AVG LUMINANCE (cd/m²)			
	0	45	90
0	3335	3335	3335
5	3324	3322	3323
15	3287	3288	3275
25	3232	3234	3206
35	3174	3152	3115
45	3092	3045	3000
55	2937	2919	2845
65	2744	2735	2600
75	2395	2374	2235
85	1972	1831	1320

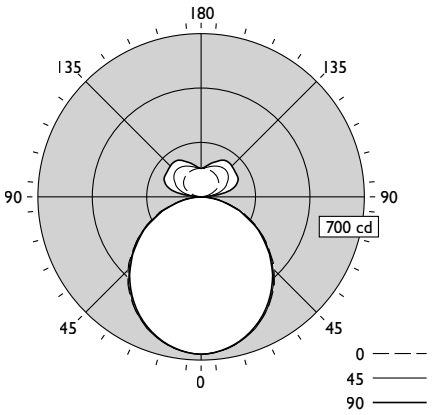

27% Up / 73% Down

FloatPlane suspended

Photometrics

Acrylic Diffuser & 90% Down Kit (AH)

Spacing Criteria: 1.28/1.26

(Click "PDF" and "IES" text to Download)

Lumen Package	Nominal CRI & CCT	Flux (lm)	Power [1] (W)	Efficacy [1] (LPW)	CRI	R9	RP-1 VDT	DLC*	Photometry Report	IES File
7500 lm/4ft	80CRI, 4000K	5634	53.7	104.9	82	10	N/A	Standard	PDF	IES
	80CRI, 3500K	5741	53.7	106.9	82	9	N/A	Standard	PDF	IES
	80CRI, 3000K	5580	53.4	104.5	83	9	N/A	Standard	PDF	IES
	90CRI, 3500K	5662	65.5	86.4	93	65	N/A	N/A	PDF	IES
6000 lm/4ft	80CRI, 4000K	4555	42.3	107.7	82	10	N/A	Standard	PDF	IES
	80CRI, 3500K	4642	42.3	109.7	82	9	N/A	Standard	PDF	IES
	80CRI, 3000K	4511	42.3	106.6	83	9	N/A	Standard	PDF	IES
	90CRI, 3500K	4535	51.8	87.5	93	65	N/A	N/A	PDF	IES
4500 lm/4ft	80CRI, 4000K	3416	31.5	108.4	82	10	N/A	Standard	PDF	IES
	80CRI, 3500K	3482	31.5	110.5	82	9	N/A	Standard	PDF	IES
	80CRI, 3000K	3384	31.5	107.4	83	9	N/A	Standard	PDF	IES
	90CRI, 3500K	3417	37.8	90.4	93	65	N/A	N/A	PDF	IES
3200 lm/4ft	80CRI, 4000K	2428	22.3	108.9	82	10	Normal spaces	Standard	PDF	IES
	80CRI, 3500K	2474	22.3	110.9	82	9	Normal spaces	Standard	PDF	IES
	80CRI, 3000K	2405	22.3	107.8	83	9	Normal spaces	Standard	PDF	IES
	90CRI, 3500K	2416	26.2	92.2	93	65	Normal spaces	N/A	PDF	IES

* Luminaire finishes other than White and/or configurations specified with Tunable White, PoE or Battery Packs are not DLC qualified.

[1] Data on this page is for Advance 0-10V and Sensor Ready configurations. For Interact Office wired (PoE) configurations, power will be lower and efficacy higher. Consult factory for information.

CANDELA DISTRIBUTION						Flux
	0	22.5	45	67.5	90	Lumens
0	773	773	773	773	773	
5	767	769	767	769	767	73
15	737	742	734	738	735	208
25	680	688	679	682	678	314
35	605	607	601	605	596	377
45	512	515	504	505	498	390
55	386	404	385	395	384	350
65	270	282	268	274	262	269
75	148	153	144	152	140	157
85	39	44	36	39	35	45
90	0	0	0	0	0	
95	7	7	12	10	12	11
105	19	21	34	43	47	35
115	34	37	51	71	78	52
125	47	48	52	62	68	49
135	56	56	60	57	58	45
145	63	63	64	65	66	40
155	68	68	68	68	69	32
165	72	71	71	71	71	20
175	73	73	73	73	73	7
180	74	74	74	74	74	

*Photometric data shown is for 3200 lm/4ft, 3500K, 80 CRI configuration.

AccuRender technology with CRI 90 available now, photometry coming soon.

COEFFICIENTS OF UTILIZATION (%)											
Pc---	80				70			50			0
Pw---	70	50	30	10	70	50	30	50	30	10	0
RCR											
0	116	116	116	116	112	112	112	105	105	105	88
1	106	101	97	93	102	98	94	91	88	86	74
2	96	88	81	76	93	85	79	80	75	70	61
3	88	77	69	63	84	75	67	70	64	59	51
4	80	68	60	53	77	66	58	62	56	50	44
5	74	61	52	46	71	59	51	56	49	43	38
6	68	55	46	40	65	53	45	50	43	38	33
7	63	50	41	35	61	48	40	46	39	33	29
8	59	45	37	31	56	44	36	42	35	30	26
9	55	42	33	28	53	40	33	38	32	27	23
10	51	38	30	25	49	37	30	36	29	24	21

AVG LUMINANCE (cd/m²)			
	0	45	90
0	3817	3817	3817
5	3802	3804	3802
15	3769	3755	3758
25	3708	3700	3696
35	3645	3622	3593
45	3576	3521	3479
55	3325	3317	3309
65	3158	3129	3057
75	2819	2748	2676
85	2227	2052	1955

ZONAL LUMEN SUMMARY			
Zone	Lumens	%Fixture	%Lamp
0-30	595	24.1%	24.1%
0-40	973	39.3%	39.3%
0-60	1713	69.2%	69.2%
0-90	2184	88.3%	88.3%
90-130	147	5.9%	5.9%
90-150	232	9.4%	9.4%
90-180	290	11.7%	11.7%
0-180	2474	100.0%	100.0%

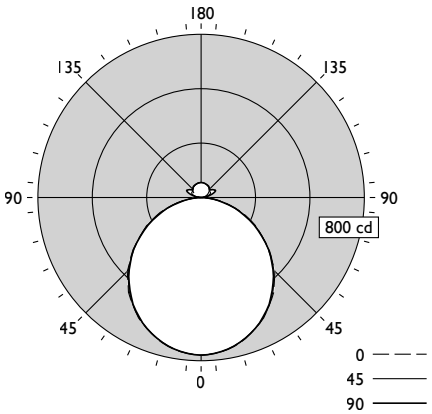

12% Up / 88% Down

Electrical				
Voltage (V)	Power (W)	Current (A)	THD (%)	Power factor
120	22.3	0.186	11.6	0.997
277	22.3	0.186	12.7	0.938
347	22.3	0.068	9.6	0.952

FloatPlane suspended

Photometrics

Acrylic Diffuser & 100% Down Kit (AJ)

Spacing Criteria: 1.27/1.26

(Click "PDF" and "IES" text to Download)

Lumen Package	Nominal CRI & CCT	Flux (lm)	Power [1] (W)	Efficacy [1] (LPW)	CRI	R9	RP-1 VDT	DLC*	Photometry Report	IES File
7500 lm/4ft	80CRI, 4000K	5451	53.7	101.5	82	10	N/A	N/A	PDF	IES
	80CRI, 3500K	5555	53.7	103.4	82	9	N/A	N/A	PDF	IES
	80CRI, 3000K	5399	53.4	101.1	83	9	N/A	N/A	PDF	IES
	90CRI, 3500K	5479	65.5	83.6	93	65	N/A	N/A	PDF	IES
6000 lm/4ft	80CRI, 4000K	4407	42.3	104.2	82	10	N/A	Standard	PDF	IES
	80CRI, 3500K	4491	42.3	106.2	82	9	N/A	Standard	PDF	IES
	80CRI, 3000K	4365	42.3	103.2	83	9	N/A	Standard	PDF	IES
	90CRI, 3500K	4388	51.8	84.7	93	65	N/A	N/A	PDF	IES
4500 lm/4ft	80CRI, 4000K	3306	31.5	105.0	82	10	N/A	Standard	PDF	IES
	80CRI, 3500K	3369	31.5	107.0	82	9	N/A	Standard	PDF	IES
	80CRI, 3000K	3274	31.5	103.9	83	9	N/A	Standard	PDF	IES
	90CRI, 3500K	3307	37.8	87.5	93	65	N/A	N/A	PDF	IES
3200 lm/4ft	80CRI, 4000K	2349	22.3	105.3	82	10	Normal spaces	Standard	PDF	IES
	80CRI, 3500K	2394	22.3	107.4	82	9	Normal spaces	Standard	PDF	IES
	80CRI, 3000K	2327	22.3	104.3	83	9	Normal spaces	Standard	PDF	IES
	90CRI, 3500K	2338	26.2	89.2	93	65	Normal spaces	N/A	PDF	IES

* Luminaire finishes other than White and/or configurations specified with Tunable White, PoE or Battery Packs are not DLC qualified.

[1] Data on this page is for Advance 0-10V and Sensor Ready configurations. For Interact Office wired (PoE) configurations, power will be lower and efficacy higher. Consult factory for information.

CANDELA DISTRIBUTION						Flux
	0	22.5	45	67.5	90	Lumens
0	828	828	828	828	828	
5	821	824	822	824	821	78
15	787	795	788	792	785	223
25	729	735	728	731	722	336
35	644	654	643	646	638	404
45	540	554	536	540	532	417
55	419	429	415	419	411	375
65	286	299	283	293	282	287
75	155	164	155	157	152	168
85	46	50	39	44	37	49
90	0	0	0	0	0	
95	4	4	4	4	5	4
105	6	6	6	7	7	7
115	8	9	9	9	8	9
125	9	11	11	11	10	9
135	11	11	13	12	12	9
145	12	12	13	13	13	8
155	12	12	12	13	13	6
165	13	12	12	13	13	4
175	13	13	12	12	12	1
180	13	13	13	13	13	

*Photometric data shown is for 3200 lm/4ft, 3500K, 80 CRI configuration.

AccuRender technology with CRI 90 available now, photometry coming soon.

COEFFICIENTS OF UTILIZATION (%)											
Pc---	80				70			50			0
Pw---	70	50	30	10	70	50	30	50	30	10	0
RCR											
0	118	118	118	118	115	115	115	110	110	110	98
1	108	103	99	95	105	101	97	96	93	90	81
2	98	90	83	77	95	88	81	84	79	74	68
3	89	79	71	64	87	77	69	74	67	62	57
4	82	70	61	54	79	68	60	65	58	53	49
5	75	62	53	47	73	61	53	59	51	46	42
6	69	56	47	41	67	55	47	53	45	40	37
7	64	51	42	36	63	50	42	48	41	35	32
8	60	46	38	32	58	46	37	44	37	31	29
9	56	43	34	29	54	42	34	41	33	28	26
10	52	39	31	26	51	39	31	37	31	26	23

ZONAL LUMEN SUMMARY			
Zone	Lumens	%Fixture	%Lamp
0-30	637	26.6%	26.6%
0-40	1041	43.5%	43.5%
0-60	1834	76.6%	76.6%
0-90	2338	97.7%	97.7%
90-130	29	1.2%	1.2%
90-150	46	1.9%	1.9%
90-180	56	2.3%	2.3%
0-180	2394	100.0%	100.0%

Electrical				
Voltage (V)	Power (W)	Current (A)	THD (%)	Power factor
120	22.3	0.186	11.6	0.997
277	22.3	0.186	12.7	0.938
347	22.3	0.068	9.6	0.952

AVG LUMINANCE (cd/m²)			
	0	45	90
0	4090	4090	4090
5	4070	4077	4071
15	4023	4031	4014
25	3970	3965	3933
35	3883	3878	3849
45	3769	3744	3713
55	3610	3576	3541
65	3345	3309	3298
75	2964	2958	2903
85	2613	2222	2086

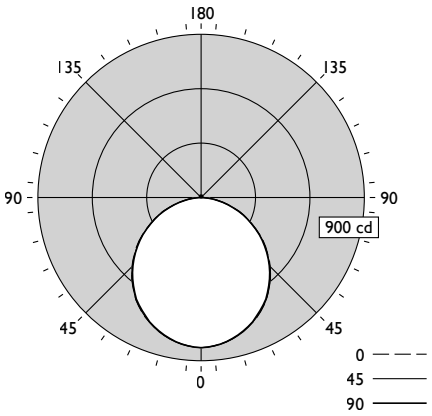

2% Up / 98% Down

FloatPlane suspended w/tunable white

Photometrics

Acrylic Diffusers (AA)

(Click "PDF" and "IES" text to Download)

Lumen Package	Nominal CRI & CCT	Flux (lm)	Power [1] (W)	Efficacy [1] (LPW)	CRI	R9	RP-1 VDT	Photometry Report	IES File
4500 lm/4ft	80CRI, 6500K	4522	37.3	121.2	85	15	Critical spaces	PDF	IES
	80CRI, 5000K	4513	38.5	117.2	87	29	Critical spaces		
	80CRI, 4000K	4616	39.4	117.2	87	29	Critical spaces		
	80CRI, 3500K	4517	39.5	114.4	86	24	Critical spaces		
	80CRI, 3000K	4514	41.4	109.0	84	14	Critical spaces		
	80CRI, 2700K	4453	39.2	113.6	82	8	Critical spaces		
3200 lm/4ft	80CRI, 6500K	3332	27.0	123.4	85	14	Critical spaces	PDF	IES
	80CRI, 5000K	3314	29.1	113.9	87	29	Critical spaces		
	80CRI, 4000K	3405	30.0	113.5	88	30	Critical spaces		
	80CRI, 3500K	3352	30.2	111.0	86	24	Critical spaces		
	80CRI, 3000K	3383	31.5	107.4	84	14	Critical spaces		
	80CRI, 2700K	3363	29.1	115.6	83	9	Critical spaces		

[1] Data on this page is for DALI Tunable White configurations. For Interact Office wired (PoE) configurations, power will be lower and efficacy higher. Consult factory for information.

CANDELA DISTRIBUTION						Flux
	0	22.5	45	67.5	90	Lumens
0	322	322	322	322	322	
5	320	319	320	319	320	30
15	308	306	308	304	307	86
25	286	281	284	278	281	130
35	255	247	251	244	250	155
45	214	206	212	204	208	161
55	168	159	164	156	164	144
65	117	109	114	106	114	109
75	63	55	62	53	62	62
85	19	11	18	14	19	20
90	8	13	11	12	12	
95	43	82	142	106	146	138
105	121	184	394	569	638	395
115	191	286	486	622	666	450
125	251	348	522	624	656	436
135	297	376	519	615	644	382
145	332	387	492	573	593	301
155	355	389	456	514	529	209
165	369	384	415	449	448	118
175	376	378	382	391	388	37
180	377	377	377	377	377	

*Photometric data shown is for 3200 lm/4ft, 2700K, 80 CRI configuration.

COEFFICIENTS OF UTILIZATION (%)											
Pc---	80				70			50			0
Pw---	70	50	30	10	70	50	30	50	30	10	0
RCR											
0	102	102	102	102	91	91	91	70	70	70	27
1	92	88	84	81	82	79	76	61	59	57	22
2	84	77	71	66	75	69	64	54	50	47	19
3	77	67	60	55	68	60	54	47	43	40	16
4	70	60	52	46	62	53	47	42	37	34	13
5	64	53	45	39	57	47	41	37	32	29	12
6	59	47	39	34	52	42	36	33	29	25	10
7	54	42	35	29	48	38	32	30	25	22	9
8	50	38	31	26	45	35	28	27	23	19	8
9	47	35	28	23	42	31	25	25	20	17	7
10	43	32	25	20	39	29	23	23	18	15	6

AVG LUMINANCE (cd/m²)			
	0	45	90
0	1588	1588	1588
5	1586	1586	1584
15	1573	1576	1568
25	1559	1549	1534
35	1537	1514	1506
45	1495	1478	1454
55	1447	1409	1411
65	1372	1328	1330
75	1208	1185	1176
85	1060	1031	1094

ZONAL LUMEN SUMMARY			
Zone	Lumens	%Fixture	%Lamp
0-30	246	7.3%	7.3%
0-40	402	12.0%	12.0%
0-60	707	21.0%	21.0%
0-90	898	26.7%	26.7%
90-130	1418	42.2%	42.2%
90-150	2102	62.5%	62.5%
90-180	2465	73.3%	73.3%
0-180	3363	100.0%	100.0%

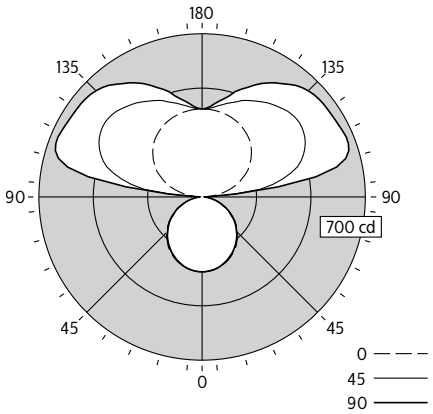

73% Up / 27% Down

Electrical				
Voltage (V)	Power (W)	Current (A)	THD (%)	Power factor
120	29.1	0.244	10.8	0.992
277	28.9	0.112	16.8	0.930

AccuRender technology with CRI 90 available now, photometry coming soon.

FloatPlane suspended w/tunable white

Photometrics

Acrylic Diffuser & 75% Down Kit (AG)

Spacing Criteria: 1.28/1.26

(Click "PDF" and "IES" text to Download)

Lumen Package	Nominal CRI & CCT	Flux (lm)	Power [1] (W)	Efficacy [1] (LPW)	CRI	R9	RP-1 VDT	Photometry Report	IES File
4500 lm/4ft	80CRI, 6500K	3773	37.3	101.1	85	15	N/A	PDF	IES
	80CRI, 5000K	3765	38.5	97.8	87	29	N/A		
	80CRI, 4000K	3851	39.4	97.7	87	29	N/A		
	80CRI, 3500K	3768	39.5	95.4	86	24	N/A		
	80CRI, 3000K	3766	41.4	91.0	84	14	N/A		
	80CRI, 2700K	3715	39.2	94.8	82	8	N/A		
3200 lm/4ft	80CRI, 6500K	2779	27.0	102.9	85	14	Normal spaces	PDF	IES
	80CRI, 5000K	2764	29.1	95.0	87	29	Normal spaces		
	80CRI, 4000K	2840	30.0	94.7	88	30	Normal spaces		
	80CRI, 3500K	2796	30.2	92.6	86	24	Normal spaces		
	80CRI, 3000K	2822	31.5	89.6	84	14	Normal spaces		
	80CRI, 2700K	2805	29.1	96.4	83	9	Normal spaces		

[1] Data on this page is for DALI Tunable White configurations. For Interact Office wired (PoE) configurations, power will be lower and efficacy higher. Consult factory for information.

CANDELA DISTRIBUTION						Flux
	0	22.5	45	67.5	90	Lumens
0	716	716	716	716	716	
5	713	712	712	712	712	68
15	692	688	691	690	688	195
25	646	642	645	643	640	296
35	578	573	577	573	571	360
45	491	488	489	486	485	376
55	386	385	383	381	380	342
65	270	267	266	264	263	263
75	142	142	141	140	139	149
85	32	33	35	35	35	41
90	0	2	3	4	4	
95	9	13	20	19	18	22
105	35	41	76	111	126	81
115	74	85	122	162	176	121
125	99	116	152	181	190	132
135	116	133	166	188	199	124
145	128	140	169	189	198	104
155	136	144	160	176	183	74
165	140	143	152	158	162	43
175	142	142	143	145	145	14
180	142	142	142	142	142	

*Photometric data shown is for 3200 lm/4ft, 2700K, 80 CRI configuration.

COEFFICIENTS OF UTILIZATION (%)											
Pc---	80				70			50			0
Pw---	70	50	30	10	70	50	30	50	30	10	0
RCR											
0	113	113	113	113	107	107	107	97	97	97	74
1	103	98	94	90	98	94	90	85	82	79	62
2	94	86	79	73	89	82	76	74	69	65	52
3	85	75	67	61	81	72	64	65	59	54	43
4	78	66	58	51	74	63	56	58	51	46	37
5	71	59	50	44	68	56	49	51	45	40	32
6	66	53	44	38	62	51	43	46	40	35	28
7	61	48	39	34	58	46	38	42	35	31	24
8	57	44	35	30	54	42	34	38	32	27	22
9	53	40	32	27	50	38	31	35	29	24	20
10	49	37	29	24	47	35	28	32	26	22	18

AVG LUMINANCE (cd/m²)			
	0	45	90
0	3537	3537	3537
5	3535	3530	3530
15	3539	3534	3518
25	3521	3515	3488
35	3485	3479	3443
45	3430	3416	3388
55	3324	3298	3272
65	3156	3109	3074
75	2710	2691	2653
85	1814	1984	1984

ZONAL LUMEN SUMMARY			
Zone	Lumens	%Fixture	%Lamp
0-30	559	19.9%	19.9%
0-40	918	32.7%	32.7%
0-60	1637	58.4%	58.4%
0-90	2089	74.5%	74.5%
90-130	357	12.7%	12.7%
90-150	585	20.8%	20.8%
90-180	716	25.5%	25.5%
0-180	2805	100.0%	100.0%

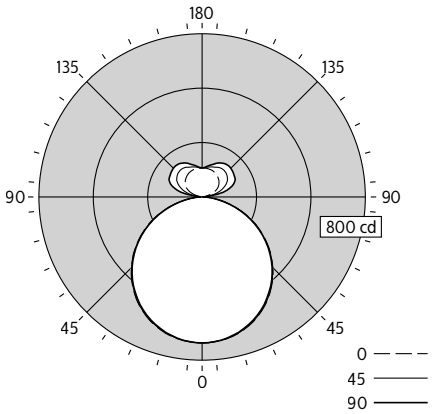

26% Up / 74% Down

Electrical				
Voltage (V)	Power (W)	Current (A)	THD (%)	Power factor
120	29.1	0.244	10.8	0.992
277	28.9	0.112	16.8	0.930

AccuRender technology with CRI 90 available now, photometry coming soon.

FloatPlane suspended w/tunable white

Photometrics

Acrylic Diffuser & 100% Down Kit (AJ)

Spacing Criteria: 1.27/1.26

(Click "PDF" and "IES" text to Download)

Lumen Package	Nominal CRI & CCT	Flux (lm)	Power [1] (W)	Efficacy [1] (LPW)	CRI	R9	RP-1 VDT	Photometry Report	IES File
4500 lm/4ft	80CRI, 6500K	3554	37.3	95.3	85	15	N/A	PDF	IES
	80CRI, 5000K	3547	38.5	92.1	87	29	N/A		
	80CRI, 4000K	3628	39.4	92.1	87	29	N/A		
	80CRI, 3500K	3550	39.5	89.9	86	24	N/A		
	80CRI, 3000K	3548	41.4	85.7	84	14	N/A		
	80CRI, 2700K	3500	39.2	89.3	82	8	N/A		
3200 lm/4ft	80CRI, 6500K	2619	27.0	97.0	85	14	N/A	PDF	IES
	80CRI, 5000K	2604	29.1	89.5	87	29	N/A		
	80CRI, 4000K	2676	30.0	89.2	88	30	N/A		
	80CRI, 3500K	2634	30.2	87.2	86	24	N/A		
	80CRI, 3000K	2659	31.5	84.4	84	14	N/A		
	80CRI, 2700K	2643	29.1	90.8	83	9	N/A		

[1] Data on this page is for DALI Tunable White configurations. For Interact Office wired (PoE) configurations, power will be lower and efficacy higher. Consult factory for information.

CANDELA DISTRIBUTION						Flux
	0	22.5	45	67.5	90	Lumens
0	902	902	902	902	902	
5	899	899	899	899	897	85
15	873	867	870	870	865	245
25	814	809	812	810	807	373
35	727	722	725	721	718	452
45	618	613	614	609	609	472
55	486	482	481	477	477	429
65	337	335	332	328	328	328
75	180	176	175	174	174	186
85	40	42	44	45	45	51
90	0	0	0	0	0	
95	2	1	0	0	0	1
105	3	2	2	1	1	2
115	3	4	3	2	2	3
125	4	4	4	3	3	3
135	5	5	5	4	4	4
145	6	5	5	5	4	3
155	6	5	5	4	4	2
165	5	5	5	5	5	1
175	5	5	4	4	4	0
180	5	5	5	5	5	

*Photometric data shown is for 3200 lm/ 4ft, 2700K, 80 CRI configuration.

AccuRender technology with CRI 90 available now, photometry coming soon.

COEFFICIENTS OF UTILIZATION (%)											
Pc---	80				70			50			0
Pw---	70	50	30	10	70	50	30	50	30	10	0
RCR											
0	119	119	119	119	116	116	116	111	111	111	99
1	108	104	99	95	106	101	97	97	94	91	83
2	98	90	83	77	96	88	82	84	79	75	69
3	90	79	71	64	87	77	70	74	68	62	58
4	82	70	61	54	80	69	60	66	59	53	49
5	75	62	53	47	73	61	53	59	51	46	42
6	70	56	47	41	68	55	47	53	46	40	37
7	64	51	42	36	63	50	42	48	41	35	33
8	60	46	38	32	58	46	37	44	37	32	29
9	56	43	34	29	55	42	34	41	33	28	26
10	52	39	31	26	51	39	31	38	31	26	24

ZONAL LUMEN SUMMARY			
Zone	Lumens	%Fixture	%Lamp
0-30	704	26.6%	26.6%
0-40	1156	43.7%	43.7%
0-60	2057	77.9%	77.9%
0-90	2623	99.3%	99.3%
90-130	9	0.3%	0.3%
90-150	16	0.6%	0.6%
90-180	20	0.7%	0.7%
0-180	2643	100.0%	100.0%

Electrical				
Voltage (V)	Power (W)	Current (A)	THD (%)	Power factor
120	29.1	0.244	10.8	0.992
277	28.9	0.112	16.8	0.930

AVG LUMINANCE (cd/m²)			
	0	45	90
0	4455	4455	4455
5	4457	4457	4448
15	4464	4449	4423
25	4436	4425	4398
35	4384	4372	4329
45	4317	4289	4254
55	4185	4142	4108
65	3939	3880	3834
75	3435	3340	3321
85	2267	2494	2550

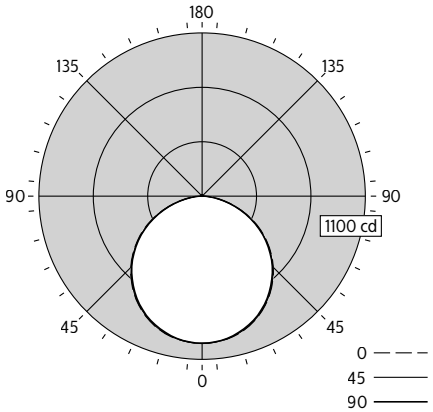

1% Up / 99% Down

© 2025 Signify Holding. All rights reserved. The information provided herein is subject to change, without notice. Signify does not give any representation or warranty as to the accuracy or completeness of the information included herein and shall not be liable for any action in reliance thereon. The information presented in this document is not intended as any commercial offer and does not form part of any quotation or contract, unless otherwise agreed by Signify.

GENLYTE SOLUTIONS
a signify business

Signify North America Corp.
400 Crossing Blvd, Suite 600
Bridgewater, NJ 08807
Telephone: 800-555-0050

Signify Canada Ltd.
281 Hillmount Road,
Markham, ON, Canada L6C 2S3
Telephone: 800-668-9008

All trademarks are owned by Signify Holding or their respective owners.