LEDALITE

Architectural Recessed

SilkSpace Definition

Imperial & Metric sizes

SilkSpace Definition seamlessly integrates into your space with modern good looks, size options to match any grid, and below the ceiling maintenance access.

SilkSpace Definition now includes AccuRender technology for the highest color quality at the highest efficacy.

Project:

Location:

Cat.No:

Type:

Line ID: Qty:

Notes:

Ordering guide

Example: 4222D1STL93540A1DE

Family	Size [4]	Version	Configuration	Source	CRI/CCT [1]	Lumens [1]
42			ST	L		
42 SilkSpace Definition	**24** 2'x4' [2] **54** 20"x4' [4,5] **M4** 600x1200mm [2]	**D1** Standard T-Grid **C1** Standard T-Grid + Chicago Plenum **A1** Standard T-Grid + Air Return [5]	**ST** Standalone	**L** LED	**950** CRI 90, 5000K **940** CRI 90, 4000K **935** CRI 90, 3500K **930** CRI 90, 3000K **927** CRI 90, 2700K	**80** 8000lm **75** 7500lm **70** 7000lm **65** 6500lm **60** 6000lm **55** 5500lm **50** 5000lm **45** 4500lm **40** 4000lm
	30 30"x30" **M7** 750x750mm					**60** 6000lm **55** 5500lm **50** 5000lm **45** 4500lm **40** 4000lm **35** 3500lm **30** 3000lm
	14 1'x4' [5] **22** 2'x2' **52** 20"x2' [5] **M2** 600x600mm **M5** 300x1200mm					**50** 5000lm **45** 4500lm **40** 4000lm **35** 3500lm **30** 3000lm **25** 2500lm
	12 1'x2' [5] **M3** 300x600mm [5]					**30** 3000lm **25** 2500lm **20** 2000lm **15** 1500lm
	11 1'x1' [5,7] **M1** 300x300mm [5,7]					**15** 1500lm **10** 1000lm

Optics	Wiring [3]	Voltage [3]	Driver (Dim %) [3,8]	Option [4,5]	Integral Sensors & Control System
A					
A Acrylic Silk Lens	**1** 1 Circuit **B** 1 Circuit+ Battery Pack [6,7]	**D** UNV 120-277V **3** 347V [9]	**E** Advance Xitanium 0-10V (1%)	**N** No option **D** Drywall trim frame **P** Flex whip (6') **S** Solid filler panel (set of 2, 20"x4' size only) **A** Air return filler panel (set of 2, 20"x4' size only)	Leave blank
		D UNV 120-277V	**D** Advance Xitanium DALI-2 D4i (1%) [6] **H** Lutron EcoSystem LDE1 (<1%, FtB) [6,9]		
	1 1 Circuit **B** 1 Circuit+ Battery Pack [6,7] **R** UL924 Sensor Bypass Relay [10]	**D** UNV 120-277V	**S** Advance Xitanium SR, DALI-2 D4i (1%, Dim-to-off, Fade-to-on) [6,9]		**CS** Interact Pro Sensor (Day/Occ) [8,9] **SB** Interact Pro Enterprise Sensor Bundle (Day/Occ + IoT) [8,9]

1. Nominal values within a range. Not all lumen packages are available with all configurations. Consult photometry data for CRI, color temp, lumens & distribution of chosen configuration.
2. Not all wiring types are available with all configurations. Consult Ledalite for a complete list of available options.
3. Flex whips are installed, Drywall Trim Frames ship separately.
4. Filler Panels available for 20"x4' size to accommodate a 20"x60" grid system. Air Return filler panels available as an option when accommodating 20"x60" grid systems.
5. Air Return version available in 2'x2' and 2'x4' sizes only.
6. 347V not available with Battery Pack, DALI, Lutron EcoSystem, Sensor Ready drivers, or Interact controls.
7. 1'x1' & 300x300mm sizes not available with Battery Pack, DALI, Lutron EcoSystem, Sensor Ready drivers, or Interact controls.
8. Interact options require separate controls hardware by Signify.
9. Must order IRT9015 Interact commissioning remote with each system order.
10. UL924 listed sensor bypass relay is factory installed between driver & sensor. Must be ordered in same module as integral sensing option. Must be installed in conjunction with a UL1008 device.

Note: Due to continuing product improvements, Ledalite reserves the right to change the specifications without notice.

DLC Note: Not all product variations listed on this page are DLC qualified. To ensure that a specific model is qualified, visit **www.designlights.org/search**

SilkSpace Definition Architectural Recessed

Imperial & Metric sizes

Dimensions

Size

2'x2' (22)
20"x2' (52)
600x600mm (M2)
30"x30" (30)
750x750mm (M7)

2'x4' (24)
20"x4' (54)
600x1200mm (M4)

1'x1' (11)
300x300mm (M1)

1'x2' (22)
300x600mm (M3)

1'x4' (14)
300x1200mm (M5)

Cross section view

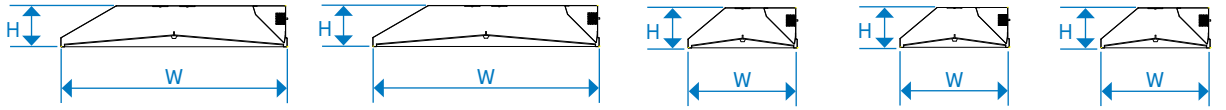

Lens view

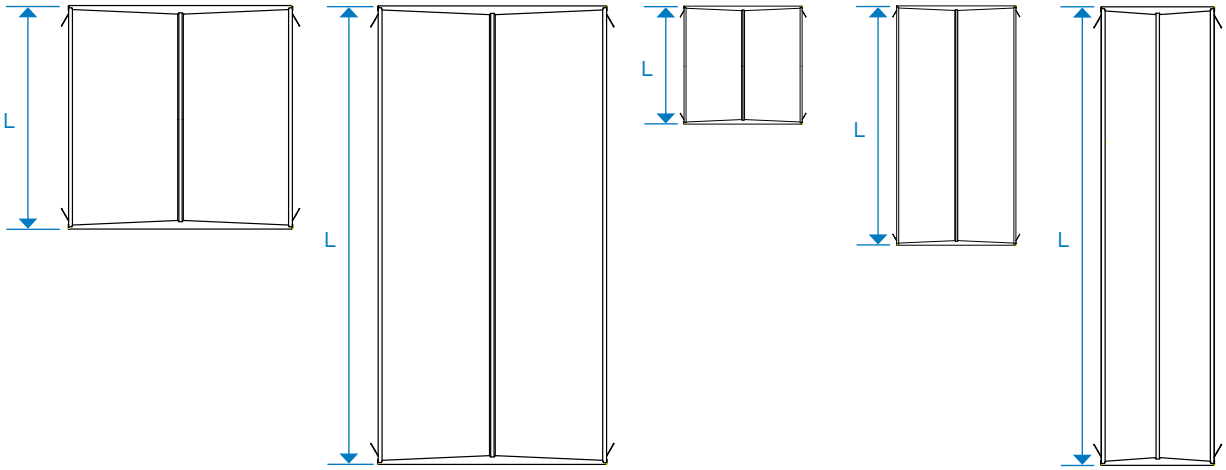

Size	W	L	H
2'x2' (22)	23.75" [603mm]	23.66" [602mm]	4.375" [110mm]
20"x2' (52)	19.78" [502mm]	23.66" [602mm]	4.375" [110mm]
600x600mm (M2)	23.41" [595mm]	23.31" [592mm]	4.375" [110mm]
30"x30" (30)	Consult Factory		
750x750mm (M7)	Consult Factory		
2'x4' (24)	23.75" [603mm]	47.38" [1210mm]	4.375" [110mm]
20"x4' (54)	19.78" [502mm]	47.66" [1211mm]	4.375" [110mm]
600x1200mm (M4)	23.41" [595mm]	46.92" [1192mm]	4.375" [110mm]
1'x1' (11)	11.75" [298mm]	11.75" [298mm]	4.375" [110mm]
300x300mm (M1)	Consult Factory		
1'x2' (22)	11.75" [298mm]	23.66" [602mm]	4.375" [110mm]
300x600mm (M3)	Consult Factory		
1'x4' (14)	11.75" [298mm]	47.38" [1210mm]	4.375" [110mm]
300x1200mm (M5)	Consult Factory		

SilkSpace Definition Architectural Recessed

Imperial & Metric sizes

Mounting details

Flat T-Grid

Integrates with most common T-Grid types. Works with 9/16" & 15/16" flat T-Grid ceilings

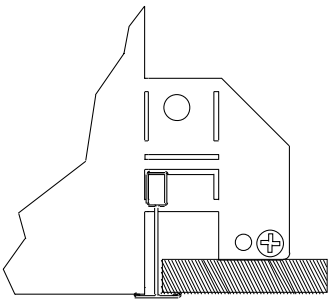

Slot T-Grid

Can be used with slot T-Grid ceilings. For 9/16" slot T-Grid ceilings, fixture will sit 5/16" above bottom of T-Bar.

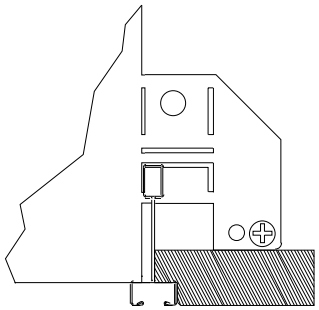

Ceiling Types

Integrated mounting tabs can be field-adjusted to various T-Grid ceiling heights for fastening directly to the T-Bar and/or tied off to the building structure.

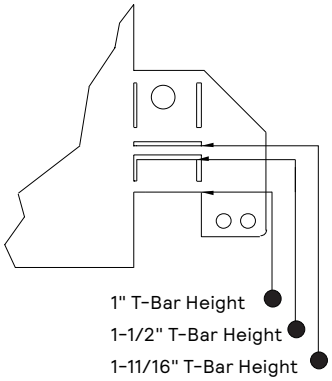

Drywall Trim Mounting Frame

The Ledalite drywall trim mounting frame assembly is designed to permit use of grid (NEMA G) fixtures in drywall or ceilings requiring flanges. Mounting frame is ordered separately and compatible with standalone recessed product. Frame can be installed directly to a solid frame (such as wood) or via hanger wires. Finish is white.

Extruded aluminum construction with mitered corners. Includes screws for complete assembly. Available in 2'x2', 2'x4' & 1'x4' sizes.

Drywall Frame Ordering Code	Size
300DK02	1'x4'
300DK03	2'x2'
300DK04	2'x4'

More information available here.

Wood Frame

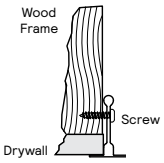

Wood frame and screws supplied by others.

Hanger Wire

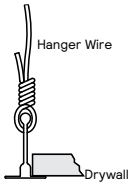

Hanger wires supplied by others.

SilkSpace Definition Architectural Recessed

Imperial & Metric sizes

Mounting details (continued)

Air Return Vents

The air return version features slotted vents along the sides of the fixture. As a result, the installation method of the air return version may be different to the standard version, please consult the installation instruction sheet. Available in 2'x2' and 2'x4' sizes. Air return side rails are finished in black. If white rails or other sizes are required please consult factory.

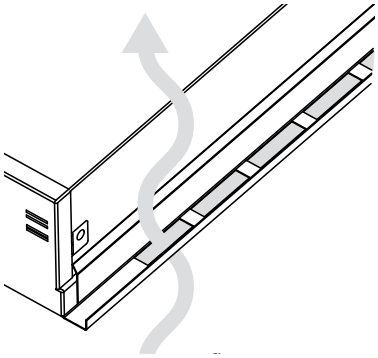

Filler Panel (20"x4' only)

Attach filler panels to ends of housing using two supplied screws shown below. Available as solid or perforated for air return.

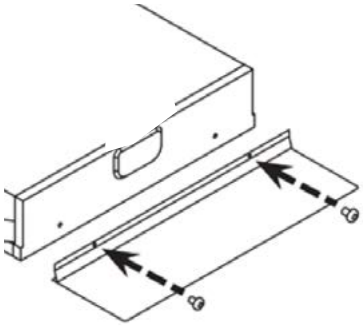

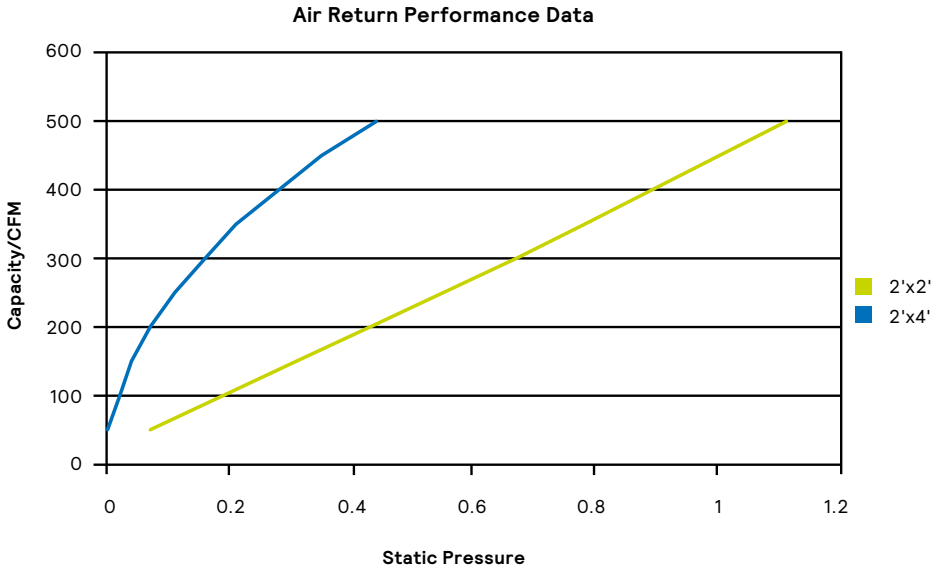

Model	Capacity/CFM	50	100	150	200	250	300	350	400	450	500
2'x2'	Static Pressure	0.07	0.19	0.31	0.43	0.55	0.67	0.78	0.89	1.00	1.11
	NC (dB)	<15	21	27	32	35	38	41	43	44	46
2'x4'	Static Pressure	0.00	0.02	0.04	0.07	0.11	0.16	0.21	0.28	0.35	0.44
	NC (dB)	<15	<15	<15	16	23	28	32	36	39	42

1. Static pressure given in inches, WG.
2. Sound ratings, NC, sound pressure levels are based on a room absorption of 10dB re10-12 watts.
3. Air Return version available in 2'x2' and 2'x4' sizes only.

SilkSpace Definition Architectural Recessed

Imperial & Metric sizes

Specifications

Optical System

Optical system consists of highly reflective powder coated interior reflectors and three flat acrylic lenses.

Finish

Housing and Frame: Post-painted, high quality powder coat.
Available in white.

Housing

Die-formed, post-painted, 22 & 24 gauge cold-rolled steel. Wire entrance is positioned on the side and/or top of housing to allow easy wiring access for installation. Access to boards and drivers from below via side lens cavity. T-bar clips built into the luminaire ends for quick and easy installation. Optional perforated or solid filler panels for 20"x48" fixtures to accommodate 60" ceiling grid.

Weight

Maximum 40lbs (2'x4' with Battery Pack).

Electrical

LED boards are easily field replaceable, if required. Fixtures are factory pre-wired and tested for all circuits and backup battery packs; all leads pulled to a side access with
cover plate.

Standard Drivers

Advance Xitanium 0-10V (1%)

Advance Xitanium DALI-2 D4i (1%)

Advance Xitanium SR (Sensor Ready), DALI-2 D4i
(1%, Dim-to-off, Fade-to-on)

Lutron EcoSystem LDE1 (<1%, Soft-on, Fade-to-Black)

Class 2 rated output.

Consult Ledalite for other available drivers.

Standard Battery Pack

Bodine, 90 min, 10W, Class 2 rated output, Emergency lumen output = 10W x luminaire efficacy x 1.1. Typical output: 1300lm.

Lumen Maintenance

LEDs have been tested by the manufacturer in accordance with IESNA LM-80-08. At an ambient temperature of 25°C, the LED lumen maintenance expectation according to IES TM-21-11 is:
L80 (10k) >60,000 hrs (Reported methodology).

Source Color

LEDs rated for color rendering of:

CRI >90 & R9>50

Fixture to fixture color accuracy within 3 SDCM.

Mounting

Compatible with 15/16" lay-in acoustical ceilings using exposed grid suspension (NEMA type G). For 9/16" slot T-grid ceilings, fixture will sit 5/16" above bottom of Tee. Integrated tabs are provided for different T-grid heights. Optional drywall kit trim mount can be fastened to a wood frame or with hangar wire.

Wiring

Optional armored cable flex whips are supplied in 6' lengths.

Approvals

Certified to UL & CSA Standards. City of Chicago Approved CCEA (housing option C).

Certain product configurations are DesignLights Consortium qualified. Please see the DLC QPL list for exact catalog numbers under DLC Family Code RRRXLU

www.designlights.org/QPL

TruGroove is Declare label certified. More information on the TruGroove label can be found on https://declare.living-future.org/ and through the Declare ID **SGY-0008**.

Select SilkSpace Definition configurations contribute toward satisfying features L06, L07 and L08 under the WELL v2 Building Standard®.

Luminaires that include Interact Pro controls options can help meet the requirements in 90.1-2022, IECC 2021, and CA T24 2022 for a maximum of 20 min. time out for occupancy controls.

Warranty

Five-year luminaire limited warranty including LED boards and driver.

www.signify.com/warranties

Environment

Type IC, rated for dry or damp locations in operating ambient temperatures of 25±5°C (77±9°F). Many luminaire components, such as reflectors, refractors, lenses, and LEDs are made from various types of plastics which can be adversely affected by airborne contaminants. If sulfur based chemicals, petroleum based products, cleaning solutions, or other contaminants are expected in the intended area of use, consult factory for compatibility. Damage caused by sulfur, chlorine, petroleum based solution or other contaminants are not covered under warranty.

QuickShip

10-day QuickShip available for most configurations upon request. More information available at:

www.signify.com/en-us/brands/ledalite/about-us/quickship

SilkSpace Definition Architectural Recessed

Imperial & Metric sizes

Controls Options*

Interact Radio Node for Standalone, Gateway and Gateway + IoT tiers (RA)

- RA is a connected radio node supporting wireless mesh connectivity.

Interact sensor for Standalone, Gateway and Gateway + IoT tiers (CS)

- CS is a connected sensor with integral occupancy and daylight sensing and supports wireless mesh connectivity.
- The sensor can operate in a standalone mode or in a gateway mode.
- Interact includes an App, a portal and a broad portfolio of wireless luminaires, lamps and retrofit kits all working on the same system.
- Startup is implemented via Interact Pro app (Android or iPhone) & Bluetooth connectivity. The app provides flexibility to choose between a gateway or non gateway mode for setup.
- Setup with the gateway requires wired internet access to the gateway.
  It is possible to add a gateway at a later point.
- Prepare project configuration steps remotely and use IRT9015 remote onsite to identify and group devices together.
- Compatible with UID8465/10 or UID8465/50 wireless dimmer switches, wireless dimmer switch, SWS200 wireless scene switch, wireless occupancy sensor (OCC0100A/02 BP Sensor WH) and wireless daylight /occupancy sensor (OCC0101A/02 DL BP Sensor WH).
- For more information on Interact visit: www.interact-lighting.com/en-us/what-is-possible/about-interact

Interact sensor bundles for Gateway + IoT tier (SB)

- SB option, in addition to occupancy and daylight sensing, supports advanced IoT capabilities such as people estimation analysis, desk level temperature & humidity sensing, noise classification, and Bluetooth Low Energy (BLE) beacon.
- Compatible with UID8465/10 or UID8465/50 wireless dimmers switches, SWS200 wireless scene switch, wireless occupancy sensor (OCC0100A/02 BP Sensor WH) and wireless daylight/occupancy sensor (OCC0101A/02 DL BP Sensor WH).
- Use Interact software and insights to increase building efficiency, achieve building wide integration and optimize space through occupancy analytics.
- Requires compatible gateway and internet connectivity for commissioning.For more information, visit: www.interact-lighting.com/office

Tunable White & BioUp

- Tunable white options are available with Interact wireless, Lutron Athena wireless, and 2ch 0-10V wired drivers. Please inquire about BioUp options and driver options such as DALI-2 DT6 or DMX control (extended lead times may apply).
- Signify tunable white solutions are designed to help maximize the influence of lighting on your daily life.
- Signify BioUp helps support daytime circadian rhythm for engagement during the day and good sleep quality at night.
- Dynamic behaviors via scheduled lighting recipes mimicking daylight patterns or supporting biorhythms.
- Scene setting via lighting pre-sets based on various combinations of lighting color temperature and intensity.

3rd Party Sensors

- Third party sensors also available, please enquire about options for Lutron Athena, Vive, or others.

Interact scalable sensor option codes across Genlyte product lines*				
	Evokit	Day-Brite	Ledalite	Lightolier
Zigbee + Bluetooth	RADIO	RADIO	RA	RA
Zigbee + Bluetooth + Sensing	SWZCS	SWZCS	CS	SBA accessory (external)
Zigbee + Bluetooth + Sensing + Environmental data	IAOSB	IAOSB	SB	SB
Zigbee + Highbay + Sensing	-	SWZCSH	-	-

SilkSpace Definition Architectural Recessed

Imperial & Metric sizes

Functionalities overview

	The three tiers of Interact		
		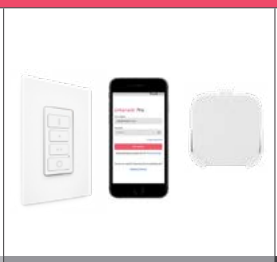	
	Standalone	Gateway	Gateway + IoT
Dimming, grouping, and zoning	✓	✓	✓
Bluetooth and ZigBee enabled	✓	✓	✓
Motion sensing and daylight harvesting	✓	✓	✓
Integration with 0-10V and phase dimming fixtures	✓	✓	✓
Code compliance	✓	✓	✓
Granular dimming and dwell time	✓	✓	✓
New Correlated color temperature (CCT) tuning by switch	✓	✓	✓
New Support for sensor-based Tunable White luminaires	✓	✓	✓
Energy reporting and monitoring		✓	✓
Scheduling		✓	✓
Demand response		✓	✓
BMS integration (BACnet)			✓
Floor plan visualization			✓
IoT sensors for wellness			✓
IoT Apps for productivity			✓

Currently supported maximum system size

To be able to design the lighting system correctly for the customer, it is important to know the prime characteristics of the system, its possibilities and limitations.

System level	
Total number of gateways	Unlimited
Total number of devices	200 per network
• luminaires with integrated sensors	150
• smart TLEDS	150
Total number of ZGP devices (sensors and switches)	50
• sensors	30
• switches	50
• zones and groups	64
Group level	
Recommended number of lights	40 (recommended 25)
Number of ZGP devices	5
Number of scenes	16

Interact system architecture for office, education, healthcare, retail, industrial and parking applications

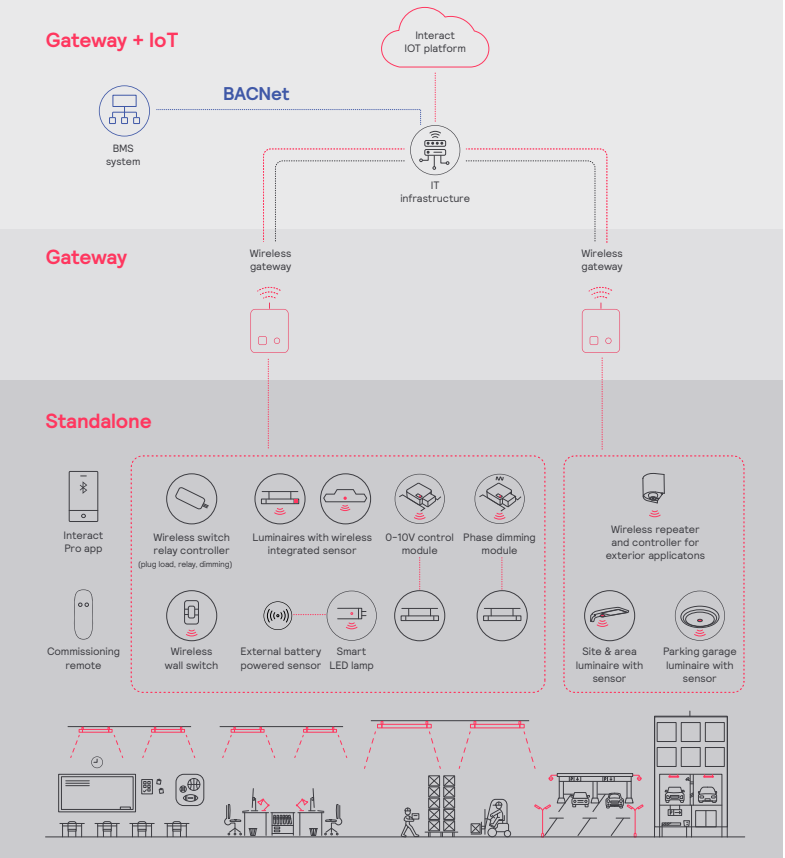

SilkSpace Definition Architectural Recessed

Imperial & Metric sizes

Colorimetry

SilkSpace Definition (42xx) AccuRender Static White

Nominal CRI &CCT		CRI 90, 2700K	CRI 90, 3000K	CRI 90, 3500K	CRI 90, 4000K	CRI 90, 5000K
CIE 013.3-1995 [1]	CRI R_a	94	93	93	93	93
	R_g	55	57	59	64	68
	G_a	99	99	99	99	99
	C_g	93	93	93	93	94
IES TM-30-18 [2]	R_f	92	91	91	91	90
	R_f, h_1	90	90	90	91	89
	R_g	100	100	99	100	100
	R_{cs}, h_1	-6%	-5%	-6%	-5%	-5%
MDER [3]		0.45	0.51	0.58	0.65	0.81

1. Color Rendering Index (CRI Ra) and Strong Red (R9) are calculated in accordance with CIE 013.3-1995. Color Gamut index (Ga) and red chroma Index (C9) are CIE based properties using the Global Lighting Association's calculation tool.
2. Fidelity Index (Rf), Red Fidelity Index (Rf,h1), Gamut Index (Rg), and Red Local Chroma Shift (Rcs,h1) are calculated in accordance with IES TM-30-18.-18.
3. Melanopic Daylight Efficacy Ratio (MDER) is the measure for "spectral melanopic efficiency" as defined in CIE S 026-2018.

SilkSpace Definition Architectural Recessed

Imperial & Metric sizes

Photometry

2'x2' (22)

Click "PDF" or "IES" text to download

Nominal CRI &CCT		CRI 90, 2700K					CRI 90, 3000K					CRI 90, 3500K					CRI 90, 4000K					CRI 90, 5000K				
Nominal Lumen Package	Watts	Flux	Efficacy (LPW)	UGR *	Photometry Report	IES File	Flux	Efficacy (LPW)	UGR *	Photometry Report	IES File	Flux	Efficacy (LPW)	UGR *	Photometry Report	IES File	Flux	Efficacy (LPW)	UGR *	Photometry Report	IES File	Flux	Efficacy (LPW)	UGR *	Photometry Report	IES File
5000	43.4	4,617	106.4	20.4	PDF	IES	4,749	109.4	20.5	PDF	IES	4,995	115.1	20.7	PDF	IES	4,981	114.8	20.7	PDF	IES	5,107	117.7	20.8	PDF	IES
4500	39.1	4,164	106.5	20.1	PDF	IES	4,284	109.6	20.2	PDF	IES	4,501	115.1	20.3	PDF	IES	4,493	114.9	20.3	PDF	IES	4,605	117.8	20.4	PDF	IES
4000	34.0	3,698	108.8	19.6	PDF	IES	3,806	111.9	19.7	PDF	IES	3,994	117.5	19.9	PDF	IES	3,992	117.4	19.9	PDF	IES	4,090	120.3	20.0	PDF	IES
3500	29.5	3,240	109.8	19.2	PDF	IES	3,335	113.1	19.3	PDF	IES	3,498	118.6	19.5	PDF	IES	3,499	118.6	19.5	PDF	IES	3,584	121.5	19.5	PDF	IES
3000	25.2	2,771	110.0	18.6	PDF	IES	2,854	113.3	18.7	PDF	IES	2,991	118.7	18.9	PDF	IES	2,994	118.8	18.9	PDF	IES	3,065	121.6	19.0	PDF	IES
2500	20.2	2.313	114.5	18.0	PDF	IES	2,383	118.0	18.1	PDF	IES	2,496	123.6	18.3	PDF	IES	2,499	123.7	18.3	PDF	IES	2,557	126.6	18.4	PDF	IES

* UGR given at 3500K, based on 4Hx8Hx0.25H. UGR can be calculated at other CCTs by importing the ies file into lighting design software.

CANDELA DISTRIBUTION						Flux
	0	22.5	45	67.5	90	Lumens
0	1358	1358	1358	1358	1358	
5	1344	1350	1346	1350	1347	128
15	1271	1281	1274	1284	1277	360
25	1145	1157	1145	1162	1160	531
35	968	985	972	997	983	614
45	768	787	765	795	778	602
55	563	578	556	587	566	510
65	360	371	357	373	360	361
75	171	183	168	182	174	188
85	30	36	29	33	29	42
90	0	0	0	0	0	
95	0	0	0	0	0	0
105	0	0	0	0	0	0
115	0	0	0	0	0	0
125	0	0	0	0	0	0
135	0	0	0	0	0	0
145	0	0	0	0	0	0
155	0	0	0	0	0	0
165	0	0	0	0	0	0
175	0	0	0	0	0	0
180	0	0	0	0	0	

COEFFICIENTS OF UTILIZATION (%)											
Pc---	80				70			50			0
Pw---	70	50	30	10	70	50	30	50	30	10	0
RCR											
0	119	119	119	119	116	116	116	111	111	111	100
1	109	105	101	97	107	103	99	98	95	93	85
2	100	92	86	80	97	90	84	87	82	77	72
3	91	81	74	67	89	80	73	77	71	65	61
4	84	72	64	57	82	71	63	69	62	56	53
5	77	66	56	50	75	64	56	62	55	49	46
6	72	59	50	44	70	58	50	56	49	43	40
7	67	53	45	39	65	53	44	51	44	38	36
8	62	49	40	35	60	48	40	47	40	34	32
9	58	45	37	31	57	44	37	43	36	31	29
10	54	41	34	29	53	41	34	40	33	28	26

* Based on a floor reflectance of 0.2

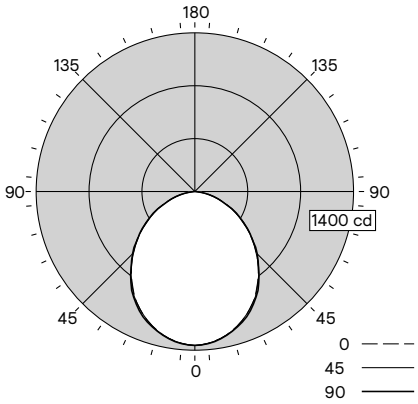

100% Down / 0% Up

ZONAL LUMEN SUMMARY			
Zone	Lumens	%Fixture	%Lamp
0-30	1019	30.6%	30.6%
0-40	1633	49.0%	49.0%
0-60	2744	82.3%	82.3%
0-90	3335	100.0%	100.0%
90-130	0	0.0%	0.0%
90-150	0	0.0%	0.0%
90-180	0	0.0%	0.0%
0-180	3335	100.0%	100.0%

AVG LUMINANCE (cd/m²)			
	0	45	90
0	4028	4028	4028
5	4000	4005	4009
15	3901	3910	3919
25	3746	3745	3796
35	3504	3519	3558
45	3220	3207	3263
55	2908	2874	2924
65	2526	2501	2528
75	1958	1928	1996
85	1027	980	993

*Photometric data shown is for 3000lm, 3500K, 90 CRI configuration.

SilkSpace Definition Architectural Recessed

Imperial & Metric sizes

Photometry

2'x4' (24)

Click "PDF" or "IES" text to download

Nominal CRI &CCT		CRI 90, 2700K					CRI 90, 3000K					CRI 90, 3500K					CRI 90, 4000K					CRI 90, 5000K				
Nominal Lumen Package	Watts	Flux	Efficacy (LPW)	UGR *	Photometry Report	IES File	Flux	Efficacy (LPW)	UGR *	Photometry Report	IES File	Flux	Efficacy (LPW)	UGR *	Photometry Report	IES File	Flux	Efficacy (LPW)	UGR *	Photometry Report	IES File	Flux	Efficacy (LPW)	UGR *	Photometry Report	IES File
8000	60.4	7,407	122.6	19.8	PDF	IES	7,628	126.3	19.9	PDF	IES	8,002	132.5	20.0	PDF	IES	7,994	132.4	20.0	PDF	IES	8,191	135.6	20.1	PDF	IES
7500	56.1	6,947	123.8	19.5	PDF	IES	7,156	127.6	19.6	PDF	IES	7,505	133.8	19.8	PDF	IES	7,497	133.6	19.8	PDF	IES	7,682	136.9	19.9	PDF	IES
7000	52.1	6,483	124.4	19.3	PDF	IES	6,679	128.2	19.4	PDF	IES	7,003	134.4	19.6	PDF	IES	6,996	134.3	19.6	PDF	IES	7,168	137.6	19.6	PDF	IES
6500	47.9	6,014	125.6	19.0	PDF	IES	6,197	129.4	19.1	PDF	IES	6,496	135.6	19.3	PDF	IES	6,491	135.5	19.3	PDF	IES	6,649	138.8	19.4	PDF	IES
6000	44.0	5,562	126.4	18.8	PDF	IES	5,732	130.3	18.9	PDF	IES	6,007	136.5	19.0	PDF	IES	6,005	136.5	19.0	PDF	IES	6,149	139.8	19.1	PDF	IES
5500	39.9	5,085	127.4	18.5	PDF	IES	5,240	131.3	18.6	PDF	IES	5,490	137.6	18.7	PDF	IES	5,491	137.6	18.7	PDF	IES	5,620	140.9	18.8	PDF	IES
5000	36.6	4,625	126.4	18.1	PDF	IES	4,766	130.2	18.2	PDF	IES	4,993	136.4	18.4	PDF	IES	4,996	136.5	18.4	PDF	IES	5,111	139.6	18.5	PDF	IES
4500	32.7	4,162	127.3	17.8	PDF	IES	4,288	131.1	17.9	PDF	IES	4,492	137.4	18.0	PDF	IES	4,497	137.5	18.0	PDF	IES	4,598	140.6	18.1	PDF	IES
4000	29.2	3,717	127.3	17.4	PDF	IES	3,829	131.1	17.5	PDF	IES	4,010	137.3	17.6	PDF	IES	4,017	137.6	17.6	PDF	IES	4,106	140.6	17.7	PDF	IES

* UGR given at 3500K, based on 4Hx8Hx0.25H. UGR can be calculated at other CCTs by importing the ies file into lighting design software.

CANDELA DISTRIBUTION						Flux
	0	22.5	45	67.5	90	Lumens
0	2395	2395	2395	2395	2395	
5	2375	2382	2373	2374	2372	225
15	2263	2272	2255	2261	2252	638
25	2060	2071	2046	2069	2057	949
35	1770	1774	1763	1781	1767	1108
45	1418	1434	1411	1442	1412	1096
55	1020	1048	1020	1046	978	921
65	653	685	653	660	631	652
75	341	344	306	313	293	340
85	68	75	54	57	44	77
90	0	0	0	0	0	
95	0	0	0	0	0	0
105	0	0	0	0	0	0
115	0	0	0	0	0	0
125	0	0	0	0	0	0
135	0	0	0	0	0	0
145	0	0	0	0	0	0
155	0	0	0	0	0	0
165	0	0	0	0	0	0
175	0	0	0	0	0	0
180	0	0	0	0	0	

COEFFICIENTS OF UTILIZATION (%)											
Pc---	80				70			50			0
Pw---	70	50	30	10	70	50	30	50	30	10	0
RCR											
0	119	119	119	119	116	116	116	111	111	111	100
1	109	105	101	97	107	103	99	98	95	93	85
2	100	92	85	80	97	90	84	87	82	77	72
3	91	81	73	67	89	80	72	77	70	65	61
4	84	72	64	57	82	71	63	68	62	56	52
5	77	65	56	50	75	64	55	62	54	49	46
6	72	59	50	44	70	58	49	56	48	43	40
7	66	53	45	39	65	52	44	51	44	38	36
8	62	49	40	35	60	48	40	47	39	34	32
9	58	45	37	31	56	44	36	43	36	31	29
10	54	41	34	28	53	41	33	40	33	28	26

* Based on a floor reflectance of 0.2

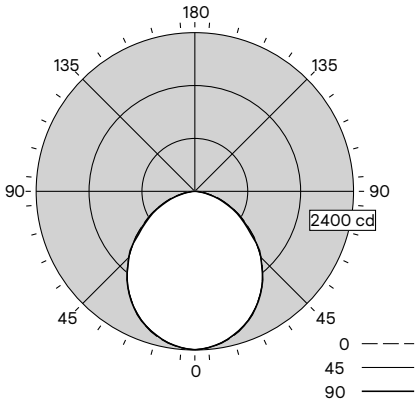

100% Down / 0% Up

ZONAL LUMEN SUMMARY			
Zone	Lumens	%Fixture	%Lamp
0-30	1812	30.2%	30.2%
0-40	2920	48.6%	48.6%
0-60	4938	82.2%	82.2%
0-90	6007	100.0%	100.0%
90-130	0	0.0%	0.0%
90-150	0	0.0%	0.0%
90-180	0	0.0%	0.0%
0-180	6007	100.0%	100.0%

AVG LUMINANCE (cd/m²)			
	0	45	90
0	3460	3460	3460
5	3443	3441	3439
15	3384	3372	3367
25	3283	3261	3278
35	3121	3110	3116
45	2896	2882	2885
55	2569	2569	2462
65	2231	2231	2157
75	1900	1708	1632
85	1129	900	736

*Photometric data shown is for 6000lm, 3500K, 90 CRI configuration.

SilkSpace Definition Architectural Recessed

Imperial & Metric sizes

Photometry

1'x4' (14)

Click "PDF" or "IES" text to download

Nominal CRI &CCT		CRI 90, 2700K					CRI 90, 3000K					CRI 90, 3500K					CRI 90, 4000K					CRI 90, 5000K				
Nominal Lumen Package (lm/4ft)	Watts	Flux	Efficacy (LPW)	UGR *	Photometry Report	IES File	Flux	Efficacy (LPW)	UGR *	Photometry Report	IES File	Flux	Efficacy (LPW)	UGR *	Photometry Report	IES File	Flux	Efficacy (LPW)	UGR *	Photometry Report	IES File	Flux	Efficacy (LPW)	UGR *	Photometry Report	IES File
5000	41.8	4,590	109.8	20.7	PDF	IES	4,721	112.9	20.8	PDF	IES	4,962	118.7	21.0	PDF	IES	4,949	118.4	21.0	PDF	IES	5,072	121.3	21.0	PDF	IES
4500	37.7	4,144	109.9	20.3	PDF	IES	4,263	113.1	20.4	PDF	IES	4,477	118.8	20.6	PDF	IES	4,470	118.6	20.6	PDF	IES	4,579	121.5	20.7	PDF	IES
4000	32.9	3,686	112.0	19.9	PDF	IES	3,792	115.3	20.0	PDF	IES	3,979	120.9	20.2	PDF	IES	3,977	120.9	20.2	PDF	IES	4,073	123.8	20.3	PDF	IES
3500	28.6	3,236	113.1	19.5	PDF	IES	3,330	116.4	19.6	PDF	IES	3,491	122.1	19.7	PDF	IES	3,492	122.1	19.7	PDF	IES	3,576	125.0	19.8	PDF	IES
3000	24.5	2,774	113.2	18.9	PDF	IES	2,856	116.6	19.0	PDF	IES	2,993	122.2	19.2	PDF	IES	2,995	122.2	19.2	PDF	IES	3,066	125.1	19.3	PDF	IES
2500	19.7	2,324	118.0	18.3	PDF	IES	2,393	121.5	18.4	PDF	IES	2,507	127.3	18.6	PDF	IES	2,509	127.4	18.6	PDF	IES	2,566	130.3	18.7	PDF	IES

* UGR given at 3500K, based on 4Hx8Hx0.25H. UGR can be calculated at other CCTs by importing the ies file into lighting design software.

CANDELA DISTRIBUTION						Flux
	0	22.5	45	67.5	90	Lumens
0	1353	1353	1353	1353	1353	
5	1342	1347	1348	1353	1353	128
15	1282	1294	1298	1315	1312	367
25	1167	1186	1184	1201	1184	546
35	1002	1023	999	1006	978	629
45	794	824	779	773	736	606
55	583	593	545	536	493	495
65	381	376	337	331	305	344
75	189	182	151	149	134	173
85	40	44	29	37	30	42
90	0	0	0	0	0	
95	0	0	0	0	0	0
105	0	0	0	0	0	0
115	0	0	0	0	0	0
125	0	0	0	0	0	0
135	0	0	0	0	0	0
145	0	0	0	0	0	0
155	0	0	0	0	0	0
165	0	0	0	0	0	0
175	0	0	0	0	0	0
180	0	0	0	0	0	

COEFFICIENTS OF UTILIZATION (%)											
Pc---	80				70			50			0
Pw---	70	50	30	10	70	50	30	50	30	10	0
RCR											
0	119	119	119	119	116	116	116	111	111	111	100
1	110	105	101	98	107	103	99	99	96	93	85
2	100	92	86	81	98	91	85	87	82	78	72
3	92	82	74	68	89	80	73	77	71	66	62
4	84	73	65	58	82	72	64	69	62	57	53
5	78	65	57	50	76	64	56	62	55	50	47
6	72	59	51	44	70	58	50	56	49	44	41
7	67	54	45	39	65	53	45	52	44	39	37
8	62	49	41	35	61	49	41	47	40	35	33
9	58	45	37	32	57	45	37	44	37	32	30
10	55	42	34	29	54	41	34	40	34	29	27

* Based on a floor reflectance of 0.2

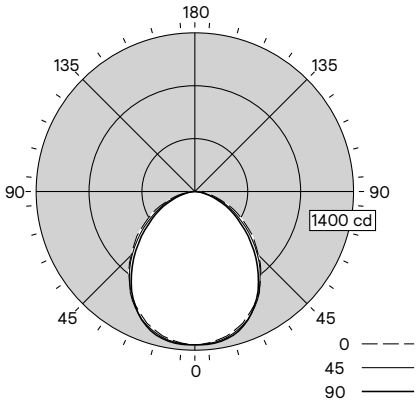

100% Down / 0% Up

ZONAL LUMEN SUMMARY			
Zone	Lumens	%Fixture	%Lamp
0-30	1041	31.3%	31.3%
0-40	1670	50.1%	50.1%
0-60	2771	83.2%	83.2%
0-90	3330	100.0%	100.0%
90-130	0	0.0%	0.0%
90-150	0	0.0%	0.0%
90-180	0	0.0%	0.0%
0-180	3330	100.0%	100.0%

AVG LUMINANCE (cd/m²)			
	0	45	90
0	4101	4101	4101
5	4083	4101	4117
15	4024	4074	4117
25	3903	3962	3960
35	3707	3697	3620
45	3404	3340	3156
55	3080	2883	2608
65	2733	2418	2189
75	2212	1768	1567
85	1385	1023	1040

*Photometric data shown is for 4000lm, 3500K, 90 CRI configuration.

© 2025 Signify Holding. All rights reserved. The information provided herein is subject to change, without notice. Signify does not give any representation or warranty as to the accuracy or completeness of the information included herein and shall not be liable for any action in reliance thereon. The information presented in this document is not intended as any commercial offer and does not form part of any quotation or contract, unless otherwise agreed by Signify.

GENLYTE SOLUTIONS
a signify business

Signify North America Corp.
400 Crossing Blvd, Suite 600
Bridgewater, NJ 08807
Telephone: 800-555-0050

Signify Canada Ltd.
281 Hillmount Road,
Markham, ON, Canada L6C 2S3
Telephone: 800-668-9008

All trademarks are owned by Signify Holding or their respective owners.